LEROY SOMER®

3708 en - 07.2003 / a

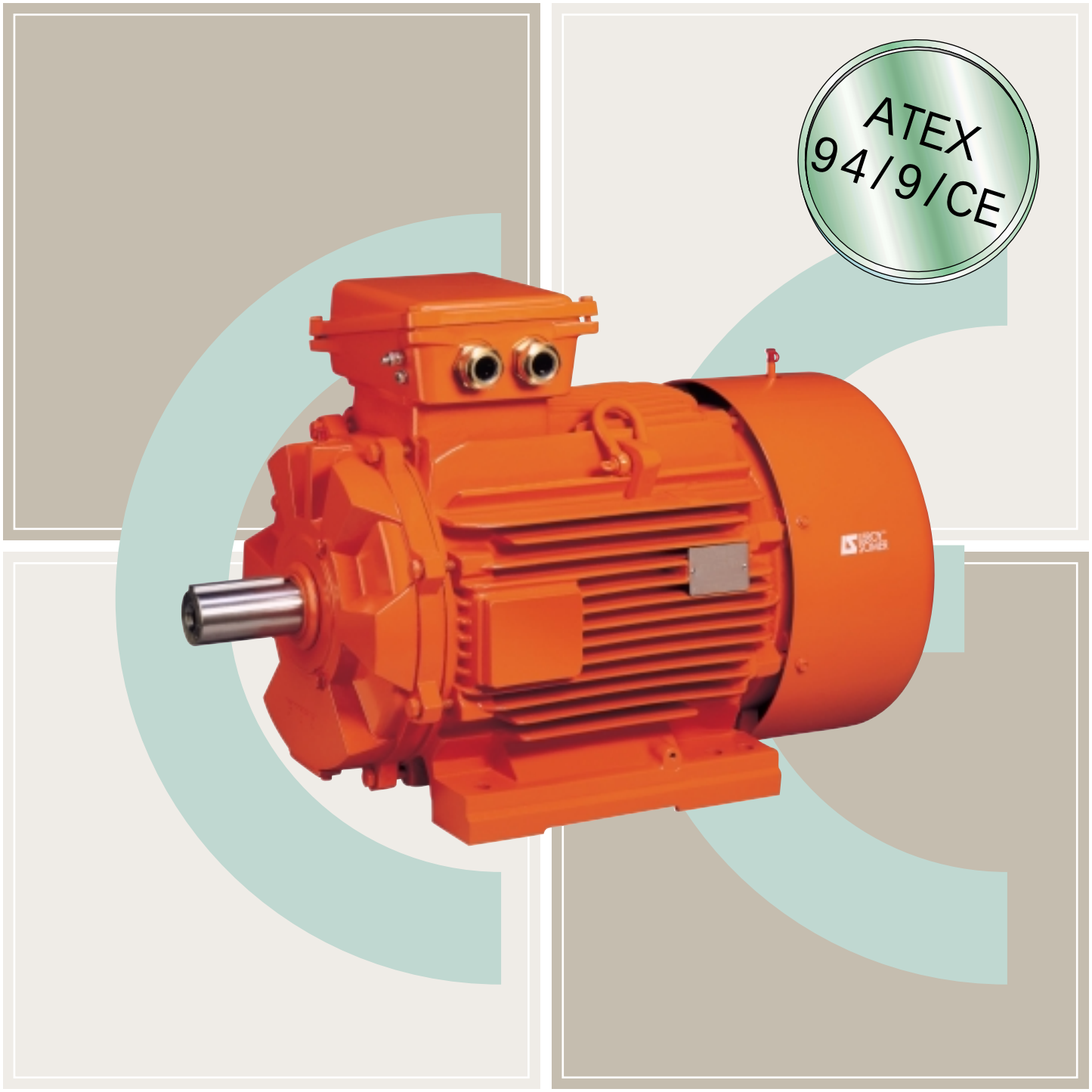

LSN - FLSN

Non-sparking
3-phase TEFV induction motors

Technical catalogue

LSN - FLSN non-sparking 3-phase TEFV induction motors

Contents

PAGE

Index

A1 - Quality assurance

A

Industrial concerns are having to cope with an ever more competitive environment. Productivity depends to a considerable degree on the right investment at the right time. LEROY-SOMER has the answer, building motors to precise standards of quality.

When carrying out quality checks on a machine's performance, the first step is to **measure the level of customer satisfaction.**

Careful study of this information tells us which points need looking at, improving and monitoring.

From the moment you place your order with our administrative staff until the motor is up and running (after design studies, launch and production activities) we keep you informed and involved.

Our own processes are constantly under review. All our staff are involved in both operational process analysis and continuous training programmes. These initiatives help them serve you better, and increased skills bring increased motivation.

At LEROY-SOMER, we think it vital for our customers to know the importance we attach to quality.

LEROY-SOMER has entrusted the certification of its expertise to various international organisations.
Certification is granted by independent professional auditors, and recognises the high standards of the **company's quality assurance procedures.**
All activities resulting in the final version of the machine have therefore received official accreditation according to **ISO 9000, Edition 2000**.
Products are also approved by official bodies who check their technical performance with regard to the various standards.
This is a fundamental requirement for a company of international standing.

Our order tracking and manufacturing processes have been assessed for conformity by the notified body INERIS.

A2 - General standardization

LSN-FLSN(VIK) motors comply with all standards quoted in this catalogue

A

List of standards quoted in this document

Reference		Date	International standards
IEC 60034-1	EN 60034-1	1999	Electrical rotating machines: ratings and operating characteristics
IEC 60034-5	EN 60034-5	2000	Electrical rotating machines: classification of degrees of protection provided by casings of rotating machines
IEC 60034-6	EN 60034-6	1993	Electrical rotating machines (except traction): cooling methods
IEC 60034-7	EN 60034-7	2000	Electrical rotating machines (except traction): symbols for mounting arrangements and assembly layouts
IEC 60034-8		2001	Electrical rotating machines: terminal markings and direction of rotation
IEC 60034-9	EN 60034-9	1997	Electrical rotating machines: noise limits
IEC 60034-12	EN 60034-12	1999	Starting characteristics for single-speed 3-phase cage induction motors for supply voltages less than or equal to 660V
IEC 60034-14	EN 60034-14	1996	Electrical rotating machines: mechanical vibrations of certain machines with a frame size above or equal to 56 mm. Measurement, evaluation and limits of vibrational intensity.
IEC 60038		1999	IEC standard voltages
IEC 60072-1		1991	Dimensions and power series for electrical rotating machines: designation of casings between 56 and 400 and flanges between 55 and 1080
IEC 60085		1984	Evaluation and thermal classification of electrical insulation
IEC 60721-2-1		1987	Classification of natural environment conditions. Temperature and humidity.
IEC 60892		1987	Effects of an imbalance in the voltage system on the characteristics of three-phase squirrel-cage induction motors
IEC 61000-2-10/11 and 2-2		1999	Electromagnetic compatibility (EMC): environment.
IEC guide 106		1989	Guidelines on the specification of environmental conditions for the determination of operating characteristics of equipment
ISO 281		2000	Bearings - Basic dynamic loadings and nominal bearing life
ISO 1680	EN 21680	1999	Acoustics - Test code for measuring airborne noise emitted by electrical rotating machines: a method for establishing an expert opinion for free field conditions over a reflective surface
ISO 8821		1999	Mechanical vibration - Balancing. Conventions on shaft keys and related parts
	EN 50102	1998	Degree of protection provided by the electrical housing against extreme mechanical impacts
IEC 60079-0	EN 50014		Electrical equipment for explosive atmospheres: General regulations
IEC 60079-15	EN 50021		Electrical equipment for explosive atmospheres: protection type "n"
	EN 50281-1-1		Electrical apparatus for use in the presence of combustible dust

A3 - Product approval and marking

A

A3.1 - APPROVAL

The LSN-FLSN non-sparking motors presented in this catalogue conform to the national and/or international standards which govern the construction of this type of equipment.

EC type-examination certificates are drawn up by notified bodies, **in accordance with the European Community Council Directive 94/9/EC known as ATEX.**

Approval is obtained when descriptive documents have been examined and validated, and tests performed. These include tests involving heating and explosion of the equipment.

EC type examination certificates granted by the bodies listed opposite are recognized by all EC countries.

Approved equipment is authorized to carry the CE mark or the distinctive community mark Ex.

List of official accreditation laboratories

- Germany: ..... **PTB - DMT/BVS**
- Belgium: ..... **ISSeP**
- Denmark: ..... **DEMKO**
- Spain: ..... **LOM**
- France: ..... **INERIS - L.C.I.E.**
- Great Britain: ..... **EECS - SCS**
- Italy: ..... **CESI**
- Netherlands: ..... **KEMA**

A3.2 - MARKING

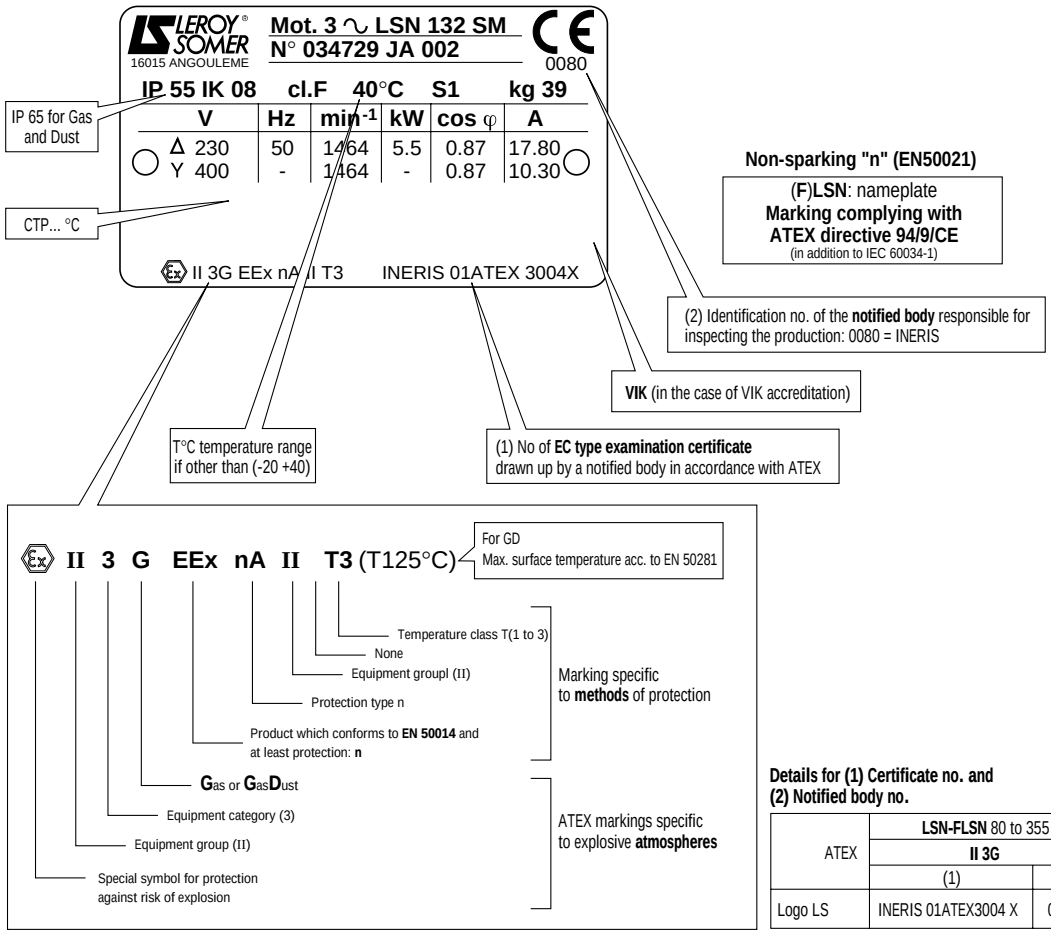

Details for (1) Certificate no. and (2) Notified body no.

ATEX	LSN-FLSN 80 to 355	
	II 3G	
	(1)	(2)
Logo LS	INERIS 01ATEX3004 X	0080

A4 - Definition of atmospheres and zones

LSN-FLSN motors can be used in zone 2 or 22

A4.1 - ATMOSPHERES AT RISK OF EXPLOSION

This includes all explosive and potentially explosive conditions, the explosion character being permanent or potential.

Explosive atmospheres:

An explosive atmosphere is an atmosphere containing a mixture of air and flammable substances (as the form of gas vapour, fog or mist) in such proportions that excessive temperature, arcs or sparks cause it to explode. **The danger is permanent.**

Potentially explosive atmospheres:

A potentially explosive atmosphere is an atmosphere which may become explosive due to the particular local conditions. **The danger is potential.**

A4.2 - DEFINITION OF HAZARDOUS AREAS

The international standard EN 60079-10 defines the danger zones according to the risk of encountering an explosive atmosphere as shown in the diagram opposite:

Note: Each country has similar and complementary publications giving instructions on the classification of dangerous areas.

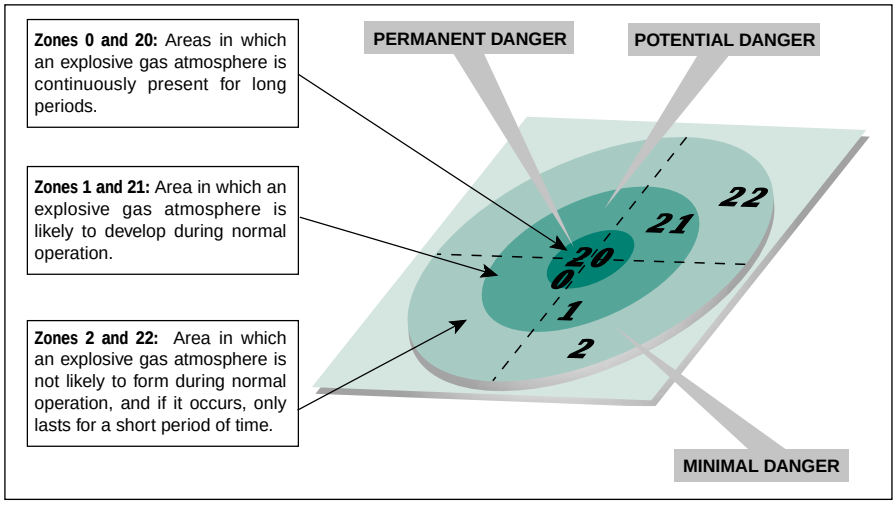

Note: Zone classification is the responsibility of the manager of the company where the equipment is installed.

A4.3 - TEMPERATURE CLASSES

A4.3.1 - Definition of temperature classes according to IEC 60079-0

The temperature class is based on the maximum temperature rise in the equipment and on the ambient operating temperature.

The maximum surface temperature of an electric device must always be lower than the ignition temperature of the mix of gases or vapour in which it will be used.

In order to be able to select various devices according to their surface temperature (internal and external), **six temperature classes** have been created.

Temperature class	T1	T2	T3	T4	T5	T6
Ignition temperature	> 450°C	> 300°C	> 200°C	> 135°C	> 100°C	> 85°C
Max. surface temperature permitted on the equipment	450°C	300°C	200°C	135°C	100°C	85°C

Note: For "GD", T_x* and T_y* applications, the lowest of the marked temperature values is taken into account.

* T_x = temperature class in gas-filled atmospheres
T_y = temperature in dust-filled atmospheres

LSN-FLSN motors are built as standard in accordance with temperature class T3.

A5 - Definition of “Index of Protection” (IP/IK)

A

Indices of protection of electrical equipment enclosures

LSN-FLSN motors are IP 55 and IK 08 as standard

First number: Protection against solid objects			Second number: Protection against liquids			Mechanical protection		
IP	**Tests**	**Definition**	**IP**	**Tests**	**Definition**	**IK**	**Tests**	**Definition**
0		No protection	0		No protection	00		No protection
1	∅ 50 mm 	Protected against solid objects of over 50mm (eg: accidental hand contact)	1 		Protected against vertically dripping water (condensation)	01	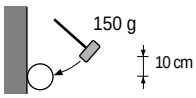	Impact energy: 0.15 J
2	∅ 12 mm 	Protected against solid objects of over 12 mm (eg: finger)	2	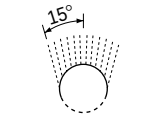	Protected against water dripping up to 15° from the vertical	02	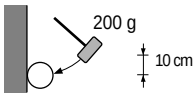	Impact energy: 0.20 J
3	∅ 2.5 mm 	Protected against solid objects of over 2.5 mm (eg: tools, wire)	3	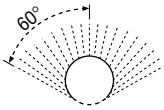	Protected against rain falling at up to 60° from the vertical	03	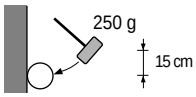	Impact energy: 0.37 J
4	∅ 1 mm 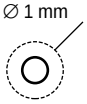	Protected against solid objects of over 1 mm (eg: small tools, thin wire)	4		Protected against water splashes from all directions	04	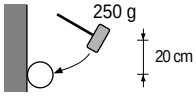	Impact energy: 0.50 J
5	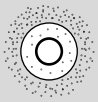	Protected against dust (no deposits of harmful material)	5	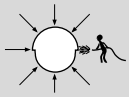	Protected against jets of water from all directions	05	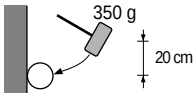	Impact energy: 0.70 J
6	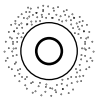	Totally protected against any dust penetration	6	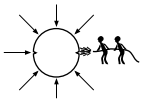	Protected against jets of water comparable to heavy seas	06	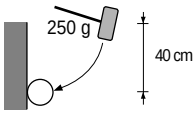	Impact energy: 1 J
			7	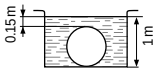	Protected against the effects of immersion at depths of between 0.15 and 1 m	07	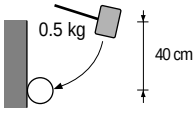	Impact energy: 2 J
			8 . . m	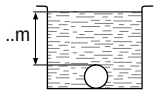	Protected against the effects of prolonged immersion at depth	08	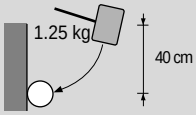	Impact energy: 5 J
						09	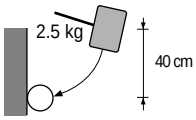	Impact energy: 10 J
						10	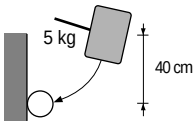	Impact energy: 20 J

Example:

IP 55 machine

IP : Index of protection

5. : Machine protected against dust and accidental contact.
*Test result: **no dust enters** in harmful quantities, no risk of direct contact with rotating parts. The test will last for 2 hours.*

.5 : Machine protected against jets of water from all directions from hoses at 3 m distance with a flow rate of 12.5 l/min at 0.3 bar.
The test will last for 3 minutes. *Test result : **no damage from water** projected onto the machine*.

LSN - FLSN non-sparking 3-phase TEFV induction motors Construction

B1 - Components

B1.1 - DESCRIPTION OF LSN - FLSN 3-PHASE MOTORS

Component	Materials	Remarks
1 Finned housing	Aluminium alloy or cast iron	- with integral or screw-on feet, or without feet • 4 or 6 fixing holes for housings with feet • lifting rings - earth terminal
2 Stator	Insulated low-carbon magnetic steel laminations Insulated electroplated copper	- low carbon content guarantees long-term lamination pack stability - welded packs - semi-enclosed slots - class F insulation
3 Rotor	Insulated low-carbon magnetic steel laminations Aluminium	- inclined cage bars - rotor cage pressure die-cast in aluminium (or alloy for special applications) - shrink-fitted or keyed to shaft - rotor balanced dynamically, class N - 1/2 key
4 Shaft	Steel	- for frame size < 132: • shaft end fitted with screw and washer • closed keyway - for frame size ≥ 132: • tapped hole • open keyway
5 End shields	Aluminium alloy	- LSN series non drive end frame sizes 80 - 90
	Cast iron	- LSN series frame sizes 80 - 90 drive end (optional for 80 and 90 at non drive end) - LSN series frame size ≥ 100 - all FLSN series frame sizes
6 Bearings		- ball bearings - bearings preloaded at non drive end
7 Labyrinth seal Lipseals	Plastic or steel Synthetic rubber	- sealed with gaskets - labyrinth seals or deflector at drive end or non drive end
8 Fan	Composite material or aluminium alloy	- 2 directions of rotation: straight blades
9 Fan cover	Pressed steel	- fitted, on request, with a drip cover for operation in vertical position, shaft end facing down
10 Terminal box	Aluminium alloy or cast iron	- IP 55 or IP 65 for "GD" applications - can be turned, opposite the feet - equipped with a block with 6 certified EEx e safety terminals for frame size ≤ 132 and isolators thereafter - terminal box supplied fitted with certified EEx e safety cable anchor glands - 1 earth terminal in each terminal box (2 from (F)LSN160 upwards)

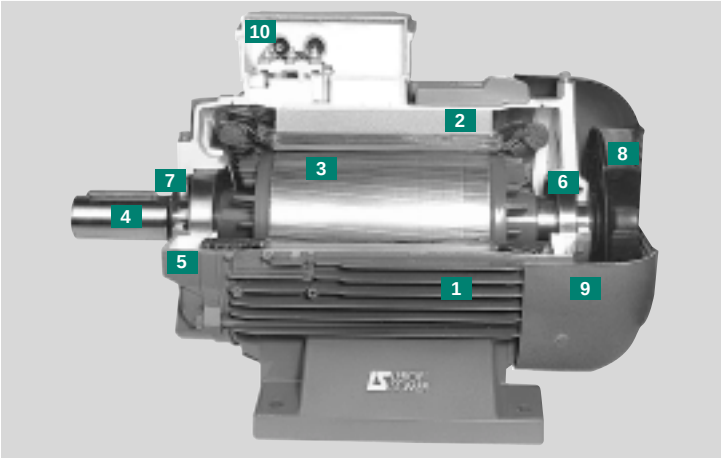

B1.2 - EXTERNAL FINISH

The standard paint colour for the LSN and FLSN range is : **RAL 2004**

B2 - Mains connection

B2.1 - TERMINAL BOX AND CABLE GLAND POSITIONS

Placed as standard on the top of the motor, the terminal box has IP 55 (G) or IP 65 (GD) protection, and is fitted with a cable gland (see table in B2.2).

The standard position of the cable gland is on the right, seen from the drive end (position A1) but, owing to the symmetrical construction of the box, it can usually be placed in any of the 4 directions.

▼ ***Positions of the terminal box in relation to the drive end (motor in IM 1001 position)***

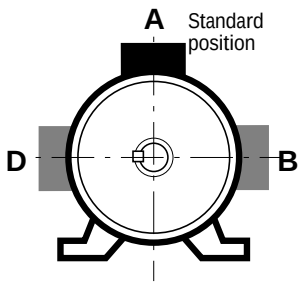

Note: For FLSN motors, only position **A** is possible.

▼ ***Positions of the cable gland in relation to the drive end***

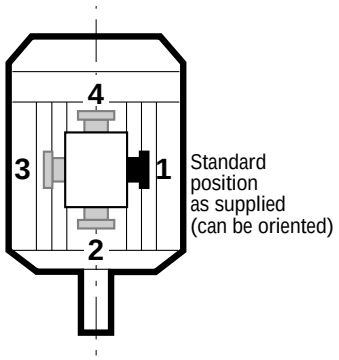

Note: Position **2** is not recommended for FF or FT flange mounted motors.

B2.2 - CABLE GLAND FOR RATED SUPPLY VOLTAGE OF 400V

Frame size	Single-speed motor		Cable gland for accessories: PTO / PTF / etc
	D.O.L. starting	YΔ starting	
80	CMDEL ISO M20 x 1.5	-	CMDEL ISO M16 x 1.5
90	CMDEL ISO M20 x 1.5	-	CMDEL ISO M16 x 1.5
100	CMDEL ISO M20 x 1.5	2 x CMDEL ISO 20	CMDEL ISO M16 x 1.5
112 - 132 S	CMDEL ISO M20 x 1.5	2 x CMDEL ISO 20	CMDEL ISO M16 x 1.5
132 M	CMDEL ISO M25 x 1.5	2 x CMDEL ISO 25	CMDEL ISO M16 x 1.5
160 - 180 MR	1 x CMDEL ISO M25 x 1.5	2 x CMDEL ISO 25	CMDEL ISO M16 x 1.5
180 - 200	1 x CMDEL ISO M32 x 1.5	2 x CMDEL ISO 32	CMDEL ISO M16 x 1.5
225	1 x CMDEL ISO M40 x 1.5	2 x CMDEL ISO 40	CMDEL ISO M16 x 1.5
250 to 315	1 x CMDEL ISO M50 x 1.5	2 x CMDEL ISO 50	CMDEL ISO M16 x 1.5
355 LA to 355LD	1 x CMA 3" GC	2 x CMA 3" GC	CMDEL ISO M16 x 1.5

CMDEL : **cable anchor glands certified EEx e**.
: cable gland made of brass.

Cable size and diameter of drill holes on brass cable gland mounting plates

Type of cable gland	Tightening capacity	
	Min. cable Ø (mm)	Max. cable Ø (mm)
CMDEL ISO M16 x 1.5	6	11
CMDEL ISO M20 x 1.5	7.5	13
CMDEL ISO M25 x 1.5	12.5	18
CMDEL ISO M32 x 1.5	17.5	25
CMDEL ISO M40 x 1.5	24.5	33.5
CMDEL ISO M50 x 1.5	33	43
CMA 3" GC	40	62

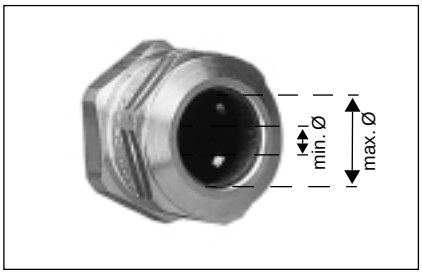

B2.3 - ISOLATORS

From 160 frame size upwards, FLSN motors are equipped with isolators instead of terminals

Motor type	Isolators	Tightening torque Nm
160 to 225 ST	M8	13
225 M to 315 ST	M10	26
315 to 355 LD	M12	45

C1 - Conditions of use

C1.1 - USE WITH VARIABLE SPEED CONTROL

As a general rule, LSN and FLSN motors used with variable speed control can operate within a frequency range of 25 to 50 Hz.

The motors should then be equipped with thermal probes placed in the winding and if necessary on the bearing to ensure that no point on their surface exceeds the temperature class throughout the range of operating speeds.

Frequency inverters, as well as switching or alarm devices receiving information from thermal probes must be placed outside the potentially explosive area.

Any deviation from these rules must be subject to a specific tender following a study of compatibility with operation in a potentially explosive atmosphere. In particular, the use of forced ventilation or an encoder must conform to the requirements for potentially explosive areas.

For motors equipped with a forced ventilation unit, this should have the same EEx nA protection and should be commissioned at the same time as the motor (safety device to be incorporated in the cabinet).

C1.2 - POSSIBLE USE OF SPACE HEATERS

For operation in atmospheres with high humidity levels or significant variations in temperature, space heaters should be offered in order to avoid condensation when the motor is stopped.

Their use should be limited to periods when the motor is switched off and cold (delay between the motor stopping and switching on the space heater approximately 1 hour).

C1.3 - VIK EXTENSION SPECIFIC TO THE GERMAN MARKET

- LSN and FLSN motors correspond to the so-called "normal motor" construction in accordance with VIK recommendations which apply to equipment for use in potentially explosive atmospheres (section 3 - VIK 1999).
- Operating ranges 380-420V (± 5% at the extremes) - 50 Hz.
- Class F winding - Temperature rise class B- ambient temperature -20°C to +40°C.
- Table of power ratings according to DIN 42673-1 in zone 2 - Temperature class T3.
- Gap between terminal box/stator blocked up.
- Drip cover in vertical operating position.
- ISO M25 cable gland from frame size 80 - Removable cable gland support for frame size ≥ 315.
- Oil-resistant seals.
- 2nd nameplate in the terminal box.

LSN non-sparking
3-phase TEFV induction motors
Electrical characteristics*

D1 - Selection data: LSN aluminium motors

PAGE

D

* Standard version LSN motors comply with standard IEC 60038 (IEC 38), as follows:
- 230/400V + 10% - 10% at 50 Hz
- 400 V Δ + 10% - 10% at 50 Hz

Other polarities (1 or 2-speed): please consult Leroy-Somer.

LSN non-sparking 3-phase TEFV induction motors Electrical characteristics

D1 - Selection data: LSN aluminium motors

2 Poles 3000 min^{-1}

EEx nA II T3

IP 55 - S1
Cl. F - ΔT 80 K

MAINS SUPPLY Δ 230 / Y 400 V or Δ 400 V **50 Hz**

Type	Rated power at 50 Hz	Rated speed	Rated torque	Rated current	Power factor	Efficiency	Starting current/ Rated current	Starting torque/ Rated torque	Max. torque/ Rated torque	Rated apparent power	Moment of inertia	Weight
	P_N kW	N_N min^{-1}	C_N N.m	$I_{N\ (400V)}$ A	Cos φ 100%	η 100%	I_D/I_N	M_D/M_N	M_M/M_N	kVA_N	J kg.m^2	IM B3 kg
LSN 56 L	0.09	**Please consult Leroy-Somer**										
LSN 56 L	0.12											
LSN 63 M	0.18											
LSN 63 M	0.25											
LSN 71 L	0.37											
LSN 71 L	0.55											
LSN 71 L	0.75											
LSN 80 L	0.75	2840	2.5	1.64	0.87	76	5.9	2.4	2.2	1.13	0.00070	8.2
LSN 80 L	1.1	2837	3.7	2.4	0.84	78	5.8	2.7	2.4	1.7	0.00090	9.7
LSN 80 L	1.5	2859	5	3.2	0.83	80.3	7	3.2	2.8	2.2	0.0011	11.3
LSN 90 S	1.5	2870	5	3.4	0.81	79.6	8	3.9	4	2.3	0.0014	12
LSN 90 L	1.8	2865	6	3.6	0.86	83.1	8	3.6	3.6	2.5	0.0017	14
LSN 90 L	2.2	2862	7.4	4.3	0.88	83.6	7.7	3.7	3.3	3	0.0021	16
LSN 100 L	3	2868	10	6.3	0.81	83.9	7.5	3.8	3.9	4.3	0.0022	20
LSN 112 M	4	2877	13.5	7.9	0.85	86	7.8	2.9	2.9	5.5	0.0029	24.4
LSN 112 MG	5.5	2916	18.1	10.5	0.88	86.6	9	3.1	3.5	7.2	0.0076	33
LSN 132 S	5.5	2916	18.1	10.5	0.88	86.6	9	3.1	3.5	7.2	0.0076	34.4
LSN 132 S	7.5	2905	24.5	14.7	0.85	86.5	8.7	3.4	3.6	10.2	0.0088	39
LSN 132 M	9	2910	29.6	17.3	0.85	88.1	8.6	2.5	3.5	12	0.016	49
LSN 132 M	11	2944	36	20.7	0.86	89.4	7.5	2.7	3.4	14.3	0.018	54
LSN 160 MP	11	2944	36	20.7	0.86	89.4	7.5	2.7	3.4	14.3	0.019	62
LSN 160 MP	15	2935	48.8	28.4	0.85	90	8.1	3	3.5	19.7	0.023	72
LSN 160 L	18.5	2934	60.2	33.7	0.87	91	8	3	3.3	23.4	0.044	88
LSN 180 MT	22	2938	71.5	39.9	0.87	91.5	8.1	3.1	3.1	27.6	0.052	99
LSN 200 LT	30	2946	97.2	52.1	0.9	92.4	8.6	2.7	3.4	36.1	0.089	154
LSN 200 L	37	2950	120	64.6	0.89	92.9	7.4	2.6	3	44.8	0.120	180
LSN 225 MT	45	**Please consult Leroy-Somer**										
LSN 250 MZ	55											

LSN non-sparking 3-phase TEFV induction motors Electrical characteristics

D1 - Selection data: single-speed

2 Poles 3000 min^{-1}

		MAINS SUPPLY 380 V 50 Hz				MAINS SUPPLY 415 V 50 Hz				MAINS SUPPLY 460 V can be used from 440V to 480V 60 Hz				
	Rated power at 50 Hz	Rated speed	Rated current	Power factor	Efficiency	Rated speed	Rated current	Power factor	Efficiency	Rated power at 60 Hz	Rated speed	Rated current	Power factor	Efficiency
Type	P_N kW	N_N min^{-1}	I_N A	*Cos φ*	η %	N_N min^{-1}	I_N A	*Cos φ*	η %	P_N kW	N_N min^{-1}	I_N A	*Cos φ*	η %
LSN 56 L	0.09	Please consult Leroy-Somer												
LSN 56 L	0.12													
LSN 63 M	0.18													
LSN 63 M	0.25													
LSN 71 L	0.37													
LSN 71 L	0.55													
LSN 71 L	0.75													
LSN 80 L	0.75	2810	1.68	0.89	76	2850	1.59	0.85	77	0.90	3410	1.65	0.89	77
LSN 80 L	1.1	2806	2.5	0.87	77.3	2855	2.5	0.80	77.9	1.3	3422	2.4	0.86	79.7
LSN 80 L	1.5	2839	3.3	0.87	80.1	2871	3.3	0.80	79.8	1.8	3450	3.2	0.85	82
LSN 90 S	1.5	2852	3.3	0.86	80.4	2881	3.5	0.76	78.6	1.8	3461	3.3	0.84	81.4
LSN 90 L	1.8	2840	3.7	0.89	82.6	2878	3.6	0.83	83	2.2	3452	3.7	0.88	84
LSN 90 L	2.2	2840	4.5	0.90	82.8	2877	4.3	0.86	83.7	2.6	3449	4.4	0.89	84.1
LSN 100 L	3	2849	6.3	0.87	83.5	2880	6.7	0.76	82.5	3.6	3458	6.3	0.85	84.5
LSN 112 M	4	2859	8	0.89	85.8	2890	8	0.81	85.8	4.8	3467	7.9	0.88	86.8
LSN 112 MG	5.5	2902	10.7	0.91	86.5	2921	10.4	0.85	86.4	6.6	3505	10.6	0.9	87.1
LSN 132 S	5.5	2902	10.7	0.91	86.5	2921	10.4	0.85	86.4	6.6	3505	10.6	0.9	87.1
LSN 132 S	7.5	2894	14.6	0.90	86.8	2914	15.2	0.80	85.8	9	3497	14.5	0.89	87.8
LSN 132 M	9	2895	17.6	0.88	87.7	2918	17.4	0.82	87.9	11	3502	17.8	0.87	88.8
LSN 132 M	11	2933	21	0.89	89.3	2948	20.9	0.82	89.2	13.2	3536	20.8	0.88	90
LSN 160 MP	11	2933	21	0.89	89.3	2948	20.9	0.82	89.2	13.2	3536	20.8	0.88	90
LSN 160 MP	15	2928	28.8	0.88	89.8	2942	29.1	0.80	89.5	18	3530	28.6	0.87	91
LSN 160 L	18.5	2924	34.9	0.89	90.6	2940	33.2	0.85	91.1	21	3528	32.4	0.89	91.3
LSN 180 MT	22	2928	41.2	0.89	91.1	2944	39.3	0.85	91.6	25	3532	38.4	0.89	91.8
LSN 200 LT	30	2936	54.4	0.91	92	2950	50.6	0.89	92.6	34	3542	50.8	0.91	92.4
LSN 200 L	37	2942	67.5	0.9	92.5	2954	62.9	0.88	93	42	3546	62.8	0.9	93.2
LSN 225 MT	45	Please consult Leroy-Somer												
LSN 250 MZ	55													

D

LSN non-sparking 3-phase TEFV induction motors Electrical characteristics

D1 - Selection data: LSN aluminium motors

4 Poles 1500 min^{-1}

EEx nA II T3

IP 55 - S1
Cl. F - ΔT 80 K

MAINS SUPPLY Δ 230 / Y 400 V or **Δ 400 V** **50 Hz**

Type	Rated power at 50 Hz	Rated speed	Rated torque	Rated current	Power factor			Efficiency			Starting current/ Rated current	Starting torque/ Rated torque	Max. torque/ Rated torque	Rated apparent power	Moment of inertia	Weight
	P_N kW	N_N min^{-1}	C_N N.m	$I_{N\ (400V)}$ A	50%	Cos φ 75%	100%	50%	η 75%	100%	I_D/I_N	M_D/M_N	M_M/M_N	kVA_N	J kg.m^2	IM B3 kg
LSN 56 L	0.09	**Please consult Leroy-Somer**														
LSN 63 M	0.12															
LSN 63 M	0.18															
LSN 71 L	0.25															
LSN 71 L	0.37															
LSN 71 L	0.55															
LSN 80 L	0.55	1410	3.8	1.42	0.55	0.68	0.76	62	69.3	73.4	4.5	2	2.3	1	0.0013	8.2
LSN 80 L	0.75	1400	5.1	2.01	0.59	0.71	0.77	66	70	70	4.5	2	2.2	1.4	0.0018	9.3
LSN 80 L	0.9	1425	6	2.44	0.54	0.67	0.73	70	73	73	5.8	3	3	1.6	0.0024	10.9
LSN 90 S	1.1	1429	7.4	2.5	0.64	0.77	0.84	77.1	78.4	76.8	4.8	1.6	2	1.7	0.0026	11.5
LSN 90 L	1.5	1428	10	3.4	0.60	0.74	0.82	77.5	79.4	78.5	5.3	1.8	2.3	2.3	0.0032	13.5
LSN 90 L	1.8	1438	12	4	0.61	0.75	0.82	79	80.8	80.1	6	2.1	3.2	2.7	0.0037	15.2
LSN 100 L	2.2	1436	14.7	4.8	0.59	0.73	0.81	79.8	81.5	81	5.9	2.1	2.5	3.4	0.0043	20
LSN 100 L	3	1437	20.1	6.5	0.59	0.72	0.81	80.8	82.6	82.6	6	2.5	2.8	4.5	0.0055	22.5
LSN 112 M	4	1438	26.8	8.3	0.57	0.76	0.83	83.4	84.2	84.2	7.1	2.5	3	5.7	0.0067	24.9
LSN 132 S	5.5	1447	36.7	11.1	0.67	0.79	0.83	85.8	86.4	85.7	6.3	2.4	2.8	7.7	0.014	36.5
LSN 132 M	7.5	1451	49.4	15.2	0.61	0.74	0.82	84.9	86.4	87	7	2.4	2.9	10.5	0.019	54.7
LSN 132 M	9	1455	59.3	18.1	0.62	0.74	0.82	86.2	87.6	87.7	6.9	2.2	3.1	12.5	0.023	59.9
LSN 160 MP	11	1454	72.2	21	0.67	0.79	0.86	87.4	88.6	88.4	7.7	2.3	3.2	14.5	0.030	70
LSN 160 LR	15	1453	98	28.8	0.69	0.78	0.84	88.4	89.8	89.4	7.5	2.9	3.6	20	0.036	86
LSN 180 MT	18.5	1456	121	35.2	0.67	0.79	0.84	90.3	90.8	90.3	7.6	2.7	3.2	24.4	0.085	100
LSN 180 LR	22	1456	144	41.7	0.68	0.79	0.84	90.9	91.2	90.7	7.9	3	3.3	28.9	0.096	112
LSN 200 LT	30	1460	196	56.3	0.69	0.8	0.84	91.5	92	91.5	6.6	2.9	2.9	39	0.151	165
LSN 225 ST	37	1468	241	68.7	0.7	0.8	0.84	92.9	93.1	92.5	6.3	2.7	2.6	47.6	0.24	205
LSN 225 MR	45	**Please consult Leroy-Somer**														
LSN 250 ME	55															

D

LSN non-sparking 3-phase TEFV induction motors Electrical characteristics

D1 - Selection data: single-speed

4 Poles 1500 min^{-1}

		MAINS SUPPLY 380 V 50 Hz				MAINS SUPPLY 415 V 50 Hz				MAINS SUPPLY 460 V (can be used from 440V to 480V) 60 Hz				
	Rated power at 50 Hz	Rated speed	Rated current	Power factor	Efficiency	Rated speed	Rated current	Power factor	Efficiency	Rated power at 60 Hz	Rated speed	Rated current	Power factor	Efficiency
Type	P_N kW	N_N min^{-1}	I_N A	*Cos φ*	η %	N_N min^{-1}	I_N A	*Cos φ*	η %	P_N kW	N_N min^{-1}	I_N A	*Cos φ*	η %
LSN 56 L	0.09	Please consult Leroy-Somer												
LSN 63 M	0.12													
LSN 63 M	0.18													
LSN 71 L	0.25													
LSN 71 L	0.37													
LSN 71 L	0.55													
LSN 80 L	0.55	1396	1.43	0.80	73	1415	1.41	0.74	72.7	0.66	1725	1.4	0.78	77.3
LSN 80 L	0.75	1380	2.06	0.80	69	1410	2.01	0.74	70	0.90	1700	2.01	0.77	73
LSN 80 L	0.9	1415	2.43	0.77	73	1435	2.48	0.70	72	1.1	1710	2.39	0.77	75
LSN 90 S	1.1	1416	2.5	0.87	75.5	1437	2.4	0.82	77.2	1.3	1726	2.4	0.85	78.9
LSN 90 L	1.5	1415	3.4	0.86	77.6	1436	3.4	0.79	78.4	1.8	1722	3.3	0.84	80.4
LSN 90 L	1.8	1427	4	0.85	79.4	1443	4	0.79	80.1	2.2	1733	4	0.84	81.9
LSN 100 L	2.2	1426	4.9	0.84	80.2	1442	4.9	0.78	80.6	2.7	1731	4.8	0.82	82.6
LSN 100 L	3	1427	6.6	0.84	81.7	1443	6.6	0.77	81.9	3.6	1731	6.5	0.83	83.7
LSN 112 M	4	1430	8.6	0.85	83	1448	8.2	0.81	83.6	4.8	1740	8.4	0.84	85.3
LSN 132 S	5.5	1438	11.5	0.87	84.3	1450	11.3	0.80	84.6	6.6	1748	11.1	0.83	86.2
LSN 132 M	7.5	1445	15.8	0.85	85	1455	15	0.82	85	9	1750	15.5	0.85	86
LSN 132 M	9	1440	18.5	0.86	86	1455	18.2	0.80	86	11	1750	18.9	0.84	87
LSN 160 MP	11	1446	21.5	0.89	87.8	1458	20.9	0.83	88.2	13.2	1754	20.8	0.85	89.2
LSN 160 LR	15	1446	29.8	0.87	88.3	1458	29.9	0.79	88.3	17	1762	29.4	0.82	89.5
LSN 180 MT	18.5	1450	35.9	0.87	90	1460	34.7	0.82	90.5	21	1754	33.6	0.86	91.1
LSN 180 LR	22	1450	43	0.86	90.4	1460	41.1	0.82	90.9	25	1754	39.9	0.86	91.5
LSN 200 LT	30	1454	58.2	0.86	91.1	1464	55.6	0.82	91.6	34	1758	54.5	0.85	92.1
LSN 225 ST	37	1462	71.8	0.85	92.1	1470	67.8	0.82	92.6	42	1764	66.7	0.85	93
LSN 225 MR	45	Please consult Leroy-Somer												
LSN 250 ME	55													

D

LSN non-sparking 3-phase TEFV induction motors Electrical characteristics

D1 - Selection data: LSN aluminium motors

6 Poles 1000 min^{-1}

EEx nA II T3

IP 55 - S1
Cl. F - ΔT 80 K

MAINS SUPPLY Δ 230 / Y 400 V or Δ 400 V **50 Hz**

Type	Rated power at 50 Hz	Rated speed	Rated torque	Rated current	Power factor			Efficiency			Starting current/ Rated current	Starting torque/ Rated torque	Max. torque/ Rated torque	Rated apparent power	Moment of inertia	Weight
	P_N kW	N_N min^{-1}	C_N N.m	$I_{N\ (400V)}$ A	50%	Cos φ 75%	100%	50%	η 75%	100%	I_D/I_N	M_D/M_N	M_M/M_N	kVA_N	J kg.m^2	IM B3 kg
LSN 63 M	0.09	**Please consult Leroy-Somer**														
LSN 71 L	0.12															
LSN 71 L	0.18															
LSN 71 L	0.25															
LSN 80 L	0.25	955	2.5	0.85	0.48	0.64	0.67	56	63	63.1	3.9	1.6	1.8	0.59	0.0024	8.4
LSN 80 L	0.37	950	3.7	1.1	0.57	0.67	0.72	59	61	66	4.3	1.7	2.2	0.76	0.0032	9.7
LSN 80 L	0.55	950	5.5	1.8	0.47	0.60	0.64	55	63	68	4.9	2.1	2.6	1.2	0.0042	11
LSN 90 S	0.75	930	7.7	2.1	0.54	0.66	0.77	60	65	68.5	4.2	2.4	2.6	1.4	0.0039	13.5
LSN 90 L	1.1	915	11.5	3	0.55	0.67	0.76	66	70	70	4.7	2.4	2.5	2.1	0.0048	15.2
LSN 100 L	1.5	905	15.8	4.2	0.52	0.62	0.74	65	69	69	4.5	2.5	2.7	2.9	0.0058	20
LSN 112 M	2.2	905	23.2	5.8	0.53	0.66	0.76	68	72	72	5.6	2.8	2.7	4	0.0087	24.2
LSN 132 S	3	957	30.3	6.8	0.59	0.71	0.78	75	78	81.1	6	2	2.6	4.7	0.018	38.3
LSN 132 M	4	961	39.6	9.3	0.56	0.66	0.75	78	83	83.6	5.9	2.5	2.9	6.4	0.034	53.3
LSN 132 M	5.5	960	54.2	13.3	0.52	0.65	0.71	80	83.5	84.1	5.5	2.5	2.8	9.2	0.039	59.4
LSN 160 M	7.5	967	74.1	16.1	0.63	0.74	0.79	82.6	84.8	85.2	4.7	1.5	2.1	11.1	0.086	81
LSN 160 L	11	967	109	23.3	0.64	0.75	0.79	85	86.5	86.3	4.6	1.6	2.1	16.1	0.116	105
LSN 180 L	15	972	147	30.1	0.65	0.76	0.81	87.2	88.6	88.7	6.8	2.3	2.8	20.9	0.192	135
LSN 200 LT	18.5	970	182	37	0.65	0.76	0.81	88.1	89.3	89	6.4	2.4	2.8	25.7	0.236	160
LSN 200 L	22	972	216	43.6	0.65	0.76	0.81	89	90.1	89.9	6	2	2.7	30.2	0.295	190
LSN 225 MR	30	968	296	59.5	0.72	0.79	0.81	89.2	90.3	89.9	6	2.2	2.5	41.2	0.39	235
LSN 250 ME	37	**Please consult Leroy-Somer**														
LSN 280 SC	45															

D

LSN non-sparking 3-phase TEFV induction motors Electrical characteristics

D1 - Selection data: single-speed

6 Poles 1000 min^{-1}

		MAINS SUPPLY 380 V 50 Hz				MAINS SUPPLY 415 V 50 Hz				MAINS SUPPLY 460 V 60 Hz (can be used from 440V to 480V)				
	Rated power at 50 Hz	Rated speed	Rated current	Power factor	Efficiency	Rated speed	Rated current	Power factor	Efficiency	Rated power at 60 Hz	Rated speed	Rated current	Power factor	Efficiency
Type	P_N kW	N_N min^{-1}	I_N A	*Cos φ*	η %	N_N min^{-1}	I_N A	*Cos φ*	η %	P_N kW	N_N min^{-1}	I_N A	*Cos φ*	η %
LSN 63 M	0.09	**Please consult Leroy-Somer**												
LSN 71 L	0.12													
LSN 71 L	0.18													
LSN 71 L	0.25													
LSN 80 L	0.25	930	0.8	0.74	64	960	0.85	0.65	63	0.30	1145	0.79	0.70	68
LSN 80 L	0.37	940	1.11	0.77	67	955	1.1	0.70	66	0.45	1145	1.10	0.74	70
LSN 80 L	0.55	930	1.8	0.74	64	960	1.9	0.65	63	0.66	1145	1.7	0.70	68
LSN 90 S	0.75	915	2	0.81	69	935	2.1	0.73	67	0.90	1125	2.1	0.76	71
LSN 90 L	1.1	895	3	0.80	70	920	3.1	0.72	69	1.3	1100	2.9	0.78	73
LSN 100 L	1.5	890	4.2	0.79	69	910	4.3	0.71	69	1.8	1100	4.1	0.76	72
LSN 112 M	2.2	895	5.8	0.80	72	915	5.8	0.72	73	2.6	1100	5.5	0.78	76
LSN 132 S	3	948	7	0.81	80.1	960	6.8	0.76	81.1	3.6	1152	6.9	0.80	82.4
LSN 132 M	4	953	9.4	0.78	83.1	965	9.2	0.73	83.4	4.8	1158	9.3	0.77	84.7
LSN 132 M	5.5	953	13.5	0.74	83.7	963	13.4	0.68	83.9	6.6	1155	13.3	0.72	85.3
LSN 160 M	7.5	962	16.6	0.81	84.5	972	15.9	0.77	85.2	8.6	1167	16	0.79	85.2
LSN 160 L	11	962	23.9	0.81	86.3	970	23	0.77	86.4	12.5	1167	23	0.79	86.3
LSN 180 L	15	970	31.1	0.83	88.4	972	29.8	0.79	88.7	17	1172	29.7	0.81	88.7
LSN 200 LT	18.5	965	38.2	0.83	88.6	975	36.4	0.79	89.6	21	1170	36.6	0.81	89
LSN 200 L	22	967	44.8	0.83	89.8	975	42.9	0.79	90.3	25	1172	43.1	0.81	89.9
LSN 225 MR	30	965	61.3	0.83	89.6	972	57.8	0.8	90.2	34	1168	58.6	0.81	89.9
LSN 250 ME	37	**Please consult Leroy-Somer**												
LSN 280 SC	45													

D

LSN non-sparking 3-phase TEFV induction motors Electrical characteristics

D1 - Selection data: LSN aluminium motors

8 Poles 750 min^{-1}

EEx nA II T3

IP 55 - S1
Cl. F - ΔT 80 K

MAINS SUPPLY Δ 230 / Y 400 V or Δ 400 V **50 Hz**

Type	Rated power at 50 Hz	Rated speed	Rated torque	Rated current	Power factor			Efficiency			Starting current/ Rated current	Starting torque/ Rated torque	Max. torque/ Rated torque	Rated apparent power	Moment of inertia	Weight
	P_N kW	N_N min^{-1}	C_N N.m	$I_{N\ (400V)}$ A	50%	Cos φ 75%	100%	50%	η 75%	100%	I_D/I_N	M_D/M_N	M_M/M_N	kVA_N	J kg.m^2	IM B3 kg
LSN 71 L	0.12	**Please consult Leroy-Somer**														
LSN 80 L	0.18	705	2.4	0.79	0.45	0.54	0.63	43	48	52	2.9	1.5	1.9	0.55	0.0031	9.7
LSN 80 L	0.25	700	3.4	0.98	0.51	0.60	0.68	45	52	54	2.8	1.7	1.9	0.68	0.0041	11.3
LSN 90 S	0.37	685	5.2	1.20	0.52	0.63	0.72	56	62	62	3.8	1.7	1.8	0.83	0.0038	13.5
LSN 90 L	0.55	670	7.8	1.7	0.52	0.61	0.72	59	62	63.5	3.5	1.7	1.7	1.2	0.0047	15.2
LSN 100 L	0.75	670	10.7	2.4	0.47	0.58	0.71	55	61.5	63.5	3.5	1.8	2.2	1.7	0.0047	18
LSN 100 L	1.1	670	15.7	3.7	0.49	0.60	0.68	58	62.5	63	3.7	2	2.2	2.6	0.0068	21.8
LSN 112 MG	1.5	710	20.2	4.7	0.43	0.55	0.64	62.5	69	72	3.8	2	2.1	3.3	0.015	24
LSN 132 SM	2.2	713	30.2	6.1	0.45	0.56	0.68	71	77.5	77.1	4	1.7	2	4.2	0.025	45.6
LSN 132 M	3	712	40.7	8	0.45	0.56	0.65	79	82.9	79.8	4.3	1.9	2.2	5.5	0.033	53.9
LSN 160 M	4	718	53.2	11	0.43	0.55	0.63	81.3	83.4	83.3	3.9	1.7	2.3	7.6	0.068	84
LSN 160 M	5.5	716	73.4	15.1	0.43	0.55	0.63	81.8	83.5	83.3	3.9	1.7	2.3	10.5	0.071	89
LSN 160 L	7.5	714	100	20.6	0.43	0.55	0.63	82.6	84	83.4	3.9	1.9	2.3	14.3	0.09	101
LSN 180 L	11	720	146	25.6	0.57	0.68	0.72	84.2	86.3	86	3.8	1.4	1.9	17.8	0.205	140
LSN 200 L	15	725	198	32.9	0.57	0.7	0.75	86.3	87.9	87.7	4.4	1.6	2.1	22.8	0.27	185
LSN 225 ST	18.5	725	244	42.4	0.54	0.66	0.72	86.2	87.7	87.5	4.2	1.6	2.1	29.4	0.33	210
LSN 225 MR	22	725	290	51.9	0.51	0.63	0.7	85.1	87.2	87.4	4.4	1.9	2.3	36	0.4	240
LSN 250 ME	30	**Please consult Leroy-Somer**														
LSN 280 SC	37															
LSN 280 MD	45															

LSN non-sparking 3-phase TEFV induction motors Electrical characteristics

D1 - Selection data: single-speed

8 Poles 750 min^{-1}

		MAINS SUPPLY 380 V 50 Hz				MAINS SUPPLY 415 V 50 Hz				MAINS SUPPLY 460 V (can be used from 440V to 480V) 60 Hz				
	Rated power at 50 Hz	Rated speed	Rated current	Power factor	Efficiency	Rated speed	Rated current	Power factor	Efficiency	Rated power at 60 Hz	Rated speed	Rated current	Power factor	Efficiency
Type	P_N kW	N_N min^{-1}	I_N A	*Cos φ*	η %	N_N min^{-1}	I_N A	*Cos φ*	η %	P_N kW	N_N min^{-1}	I_N A	*Cos φ*	η %
LSN 71 L	0.12	**Please consult Leroy-Somer**												
LSN 80 L	0.18	700	0.77	0.66	53.5	710	0.80	0.61	51.6	0.22	860	0.77	0.62	58
LSN 80 L	0.25	695	0.83	0.75	61	705	1.03	0.62	54.5	0.30	850	0.97	0.65	59.5
LSN 90 S	0.37	670	1.22	0.75	61.5	690	1.20	0.69	62	0.45	835	1.20	0.71	66.5
LSN 90 L	0.55	655	1.8	0.74	62	680	1.8	0.67	64	0.66	810	1.8	0.72	66.5
LSN 100 L	0.75	660	2.4	0.76	62	675	2.5	0.69	61	0.90	820	2.3	0.72	68
LSN 100 L	1.1	655	3.6	0.73	63	675	3.8	0.64	62	1.3	820	3.6	0.68	67
LSN 112 MG	1.5	705	4.7	0.68	71	720	4.8	0.61	72	1.8	860	4.5	0.66	76
LSN 132 SM	2.2	704	6.1	0.72	76.3	716	6.1	0.65	76.6	2.6	857	6	0.69	79
LSN 132 M	3	705	8.1	0.71	79.3	715	8.1	0.65	79.8	3.6	870	8	0.69	81.8
LSN 160 M	4	714	11.1	0.66	82.6	722	11.1	0.6	83.4	4.6	868	10.6	0.64	85.2
LSN 160 M	5.5	712	15.3	0.66	82.6	720	15.3	0.6	83.4	6.3	866	14.5	0.64	85.2
LSN 160 L	7.5	708	20.6	0.67	82.7	716	20.8	0.6	83.5	8.6	862	19.5	0.65	85.2
LSN 180 L	11	715	26	0.75	85.6	725	25.3	0.7	86.3	12.5	870	25.3	0.72	86
LSN 200 L	15	720	34.1	0.77	86.8	725	33.2	0.72	87.2	17	875	32.4	0.75	87.7
LSN 225 ST	18.5	720	43.1	0.75	87	725	42.1	0.7	87.4	21	875	41.8	0.72	87.5
LSN 225 MR	22	720	52.4	0.73	87.4	730	53	0.66	86.8	25	875	51.3	0.7	87.4
LSN 250 ME	30	**Please consult Leroy-Somer**												
LSN 280 SC	37													
LSN 280 MD	45													

D

FLSN non-sparking
3-phase TEFV induction motors
Electrical characteristics*

D2 - Selection data: FLSN cast iron motors

PAGE

D

* Standard version FLSN motors comply with standard IEC 60038 (IEC 38), as follows:
- 230/400V + 10% - 10% at 50 Hz
- 400 V Δ + 10% - 10% at 50 Hz

Other polarities (1 or 2-speed): please consult Leroy-Somer.

FLSN non-sparking 3-phase TEFV induction motors Electrical characteristics

D2 - Selection data: FLSN cast iron motors

2 Poles 3000 min^{-1}

EEx nA II T3

IP 55
Cl. F - ΔT 80 K
400 V +/- 10%

MAINS SUPPLY Δ 230 / Y 400 V or **Δ 400 V** **50 Hz**

Type	Rated power at 50 Hz	Rated speed	Rated torque	Rated current	Power factor			Efficiency			Starting current/ Rated current	Starting torque/ Rated torque	Max. torque/ Rated torque	Rated apparent power	Moment of inertia	Weight
	P_N kW	N_N min^{-1}	C_N N.m	$I_{N\,(400V)}$ A	50%	Cos φ 75%	100%	50%	η 75%	100%	I_D/I_N	M_D/M_N	M_M/M_N	kVA_N	J kg.m^2	IM B3 kg
FLSN 80 L	0.75	2840	2.5	1.6	0.76	0.80	0.86	73	77.4	76.9	5.9	2.4	2.2	1.1	0.0007	15
FLSN 80 L	1.1	2837	3.7	2.4	0.65	0.77	0.84	76.6	78.5	79.5	5.6	2.7	2.4	1.6	0.0009	18
FLSN 90 S	1.5	2870	5	3.3	0.64	0.75	0.81	79	81	82	7.3	3	3.1	2.3	0.0014	21
FLSN 90 L	2.2	2862	7.5	4.3	0.71	0.82	0.88	82.5	84.2	84.5	8.1	3.7	3.5	3	0.0021	26
FLSN 100 LK	3	2925	10	5.5	0.85	0.89	0.91	83	84	86	8.4	2.4	3	3.8	0.0069	42
FLSN 112 M	4	2940	13.6	7.5	0.81	0.87	0.89	84	86	86.5	8.7	2.9	3.3	5.2	0.0084	48
FLSN 132 S	5.5	2940	18.7	10.6	0.79	0.84	0.86	84	85.5	87	7.6	2.3	2.9	7.4	0.0168	67
FLSN 132 S	7.5	2950	25	14.1	0.81	0.85	0.87	87	88	88	8.9	2.6	3.4	9.8	0.0236	70
FLSN 160 MA	11	2935	35.8	20	0.82	0.86	0.88	85.3	87.3	88.4	8.6	2.8	3.2	14.1	0.037	97
FLSN 160 MB	15	2935	48.8	27	0.82	0.86	0.88	87	89.1	89.7	8.6	2.8	3.2	19	0.043	108
FLSN 160 L	18.5	2940	60	33	0.84	0.88	0.90	88.1	90.2	90.8	8.4	2.7	3.1	22.6	0.057	126
FLSN 180 MR	22	2940	71	39	0.83	0.87	0.89	88.3	90.4	91	8.5	2.8	3.1	27.2	0.065	135
FLSN 200 LA	30	2950	97	51	0.85	0.90	0.91	90.2	91.9	92.4	7.7	2.4	2.8	35.7	0.13	245
FLSN 200 LB	37	2959	120	63	0.84	0.89	0.9	91.3	93	93.5	8.3	3	3.4	44.4	0.16	265
FLSN 225 MT	45	2958	145	78	0.83	0.88	0.89	91.6	93.3	93.8	8.3	2.8	3.2	54	0.19	290
FLSN 250 M	55	2966	177	94	0.81	0.87	0.89	92.2	94	94.6	7.9	2.5	3.5	65	0.44	405
FLSN 280 S	75	2965	241	127	0.82	0.88	0.90	93	94.2	94.6	8	2.7	3.8	88	0.47	505
FLSN 280 M	90	2962	290	149	0.83	0.89	0.91	91.6	95.1	95.5	7.7	2.6	3.7	104	0.53	560
FLSN 315 ST	110	2975	353	178	0.89	0.92	0.93	95	95.7	95.8	8.2	2.8	3.3	123	1.08	850
FLSN 315 M	132	2962	426	221	0.86	0.89	0.90	93.8	95.4	96	7.5	1.8	2.7	153	1.71	1000
FLSN 315 LA	160	2969	515	272	0.82	0.87	0.89	92.8	94.9	95.5	7.5	2	3	188	1.71	1050
FLSN 315 LB	200	2967	643	342	0.81	0.86	0.88	93.9	95.4	96	7.7	2.3	3.4	237	1.99	1150
FLSN 355 LA	250	2978	802	424	0.84	0.88	0.89	94	95.2	95.6	7.2	2.1	2.6	294	3.39	1400
FLSN 355 LB	275	2980	881	464	0.86	0.90	0.89	95	96	96.3	8.4	2.3	2.9	321	3.39	1500
FLSN 355 LB •	315	2976	1011	525	0.85	0.89	0.90	94.9	95.9	96.2	7.2	1.8	2.5	364	3.39	1500
FLSN 355 LC	330	2980	1058	560	0.81	0.86	0.88	95.4	96.3	96.6	7.9	1.9	2.6	388	3.39	1915
FLSN 355 LC	355	2979	1138	588	0.83	0.88	0.90	95.6	96.5	96.8	8.2	2.3	3.1	407	4.03	1915
FLSN 355 LD •	400	2977	1283	673	0.82	0.87	0.89	95.2	96.1	96.4	7.8	2	2.7	466	4.03	1915

• Class F temperature rise

For power ratings above 400 kW, please consult Leroy-Somer.

FLSN non-sparking 3-phase TEFV induction motors Electrical characteristics

D2 - Selection data: single-speed

2 Poles 3000 min^{-1}

	MAINS SUPPLY 380 V 50 Hz					MAINS SUPPLY 415 V 50 Hz				MAINS SUPPLY 460 V (can be used from 440V to 480V) 60 Hz				
	Rated power at 50 Hz	Rated speed	Rated current	Power factor	Efficiency	Rated speed	Rated current	Power factor	Efficiency	Rated power at 60 Hz	Rated speed	Rated current	Power factor	Efficiency
Type	P_N kW	N_N min^{-1}	I_N A	$Cos\ \varphi$	η %	N_N min^{-1}	I_N A	$Cos\ \varphi$	η %	P_N kW	N_N min^{-1}	I_N A	$Cos\ \varphi$	η %
FLSN 80 L	0.75	2802	1.8	0.85	74.5	2846	1.8	0.78	74.1	0.9	3420	1.8	0.83	76.3
FLSN 80 L	1.1	2819	2.4	0.89	77.1	2859	2.4	0.84	75.5	1.3	3442	2.4	0.88	78.8
FLSN 90 S	1.5	2853	3.2	0.87	81	2885	3	0.82	84	1.8	3485	3.1	0.87	83
FLSN 90 L	2.2	2880	4.8	0.84	83	2904	4.6	0.81	82.5	2.7	3490	4.6	0.88	84.5
FLSN 100 LK	3	2910	5.8	0.93	84	2930	5.5	0.9	84	3.6	3510	5.8	0.92	84
FLSN 112 M	4	2925	7.9	0.91	85	2945	7.5	0.88	84.5	4.8	3530	7.8	0.91	85
FLSN 132 S	5.5	2930	10.9	0.9	85.5	2940	10.3	0.87	85.4	6.6	3525	10.9	0.90	84.6
FLSN 132 S	7.5	2935	14.2	0.92	87.5	2955	13.4	0.89	87.8	9	3530	14.2	0.91	87.4
FLSN 160 MA	11	2929	21	0.89	88.2	2939	20	0.87	88.4	13.2	3535	21	0.88	88.1
FLSN 160 MB	15	2929	29	0.89	89.5	2939	27	0.87	89.7	18	3535	29	0.88	89.4
FLSN 160 L	18.5	2933	34	0.91	90.6	2944	32	0.89	90.8	22	3540	34	0.90	90.5
FLSN 180 MR	22	2933	41	0.90	90.8	2944	38	0.88	91	25	3533	39	0.90	90.5
FLSN 200 LA	30	2946	54	0.92	92.3	2967	50	0.90	93	34.5	3546	51	0.92	92.1
FLSN 200 LB	37	2955	65	0.92	93.6	2963	62	0.89	93.9	42.5	3555	62	0.92	93.4
FLSN 225 MT	45	2946	81	0.9	93.7	2956	75	0.89	93.7	52	3546	78	0.90	93.5
FLSN 250 M	55	2962	98	0.90	94.5	2970	91	0.89	94.6	63	3562	93	0.90	94.3
FLSN 280 S	75	2966	134	0.90	94.5	2967	124	0.89	94.6	86	3566	127	0.90	94.3
FLSN 280 M	90	2953	158	0.91	95.3	2967	146	0.90	95.5	103	3567	151	0.90	95.3
FLSN 315 ST	110	2971	188	0.93	95.7	2976	172	0.93	95.7	126	3571	178	0.93	95.5
FLSN 315 M	132	2957	230	0.91	96	2963	213	0.90	96	150	3557	216	0.91	95.8
FLSN 315 LA	160	2963	283	0.90	95.3	2972	265	0.88	95.3	180	3563	264	0.90	95.1
FLSN 315 LB	200	2956	358	0.89	95.3	2968	338	0.86	95.6	230	3556	341	0.89	95.1
FLSN 355 LA	250	2974	442	0.90	95.4	2978	409	0.89	95.5	280	3574	410	0.90	95.2
FLSN 355 LB	275	2980	476	0.91	96.4	2980	445	0.89	96.6	315	3576	457	0.90	96.2
FLSN 355 LB	315	2970	552	0.90	96.3	2976	516	0.88	96.5	330	3571	484	0.89	96.1
FLSN 355 LC	330	2980	590	0.88	96.6	2980	561	0.85	96.2	380	3576	567	0.88	95.6
FLSN 355 LC	355	2978	619	0.90	96.8	2983	589	0.87	96.4	410	3578	597	0.90	95.8
FLSN 355 LD	400	2976	709	0.89	96.3	2981	647	0.89	96.6	440	3576	657	0.88	95.5

For power ratings above 400 kW, please consult Leroy-Somer.

FLSN non-sparking 3-phase TEFV induction motors Electrical characteristics

D2 - Selection data: FLSN cast iron motors

4 Poles 1500 min^{-1}

EEx nA II T3

IP 55
Cl. F - ΔT 80 K
400 V +/- 10%

MAINS SUPPLY Δ 230 / Y 400 V or **Δ 400 V** **50 Hz**

Type	Rated power at 50 Hz	Rated speed	Rated torque	Rated current	Power factor			Efficiency			Starting current/ Rated current	Starting torque/ Rated torque	Max. torque/ Rated torque	Rated apparent power	Moment of inertia	Weight
	P_N kW	N_N min^{-1}	C_N N.m	$I_{N\ (400V)}$ A	50%	Cos φ 75%	100%	50%	η 75%	100%	I_D/I_N	M_D/M_N	M_M/M_N	kVA_N	J kg.m^2	IM B3 kg
FLSN 80 L	0.55	1410	3.7	1.6	0.56	0.69	0.74	65	69.4	69.2	4.4	2.1	2.3	1.1	0.0013	15
FLSN 80 L	0.75	1425	5	2	0.58	0.70	0.75	70	73	72.5	5.7	3	2.8	1.4	0.0024	17
FLSN 90 S	1.1	1429	7.5	2.5	0.68	0.77	0.83	76	78.4	78	4.9	1.6	2	1.7	0.0026	19
FLSN 90 L	1.5	1428	10	3.3	0.62	0.74	0.82	77	79.4	79.5	5.3	1.8	2.3	2.3	0.0032	21
FLSN 90 L	1.8	1438	12.3	4	0.63	0.75	0.82	79	80.8	80.1	5.9	2.1	3.2	2.7	0.0037	23
FLSN 100 LK	2.2	1457	15	4.6	0.67	0.77	0.83	82.2	84.4	83.8	6.3	1.9	2.4	3.2	0.0077	41
FLSN 100 LK	3	1454	20	6.2	0.64	0.76	0.82	83.4	84.9	84.7	6.5	2.1	2.6	4.3	0.0094	44
FLSN 112 M	4	1462	27.5	8.4	0.62	0.74	0.81	82.2	84.9	85.1	7.4	2.5	2.9	5.8	0.012	48
FLSN 132 S	5.5	1467	37	10.9	0.66	0.78	0.84	86	87.1	87	8	2.7	3.7	7.7	0.0154	65
FLSN 132 M	7.5	1450	50	14.3	0.75	0.82	0.87	85.5	87.2	87	7.3	1.9	2.9	10.5	0.0192	70
FLSN 132 M	9	1449	61	16.8	0.72	0.84	0.88	86.5	88.4	87.7	7.6	2.8	2.9	11.6	0.023	75
FLSN 160 M	11	1455	72.2	21	0.72	0.81	0.86	87	88.4	88.5	7.8	2.6	3.3	15	0.06	103
FLSN 160 L	15	1455	98.5	28	0.72	0.81	0.86	88	89.4	89.5	7.8	2.6	3.3	20	0.079	120
FLSN 180 MR	18.5	1465	120.5	35	0.72	0.81	0.86	88.5	89.9	90	7.8	2.6	3.3	24	0.095	135
FLSN 180 L	22	1465	143	41	0.73	0.82	0.86	89.7	91.2	91.4	7.4	2.6	2.4	28	0.137	184
FLSN 200 L	30	1471	195	56	0.73	0.82	0.85	91	92	91.9	6.5	2.5	2.3	39	0.24	260
FLSN 225 ST	37	1476	240	70	0.66	0.77	0.82	91.6	93.3	93.6	7	2.6	2.4	49	0.28	290
FLSN 225 M	45	1483	290	79	0.76	0.84	0.87	93.2	94.3	94.5	7	2.5	2.6	55	0.7	388
FLSN 250 M	55	1479	355	100	0.70	0.80	0.84	93.9	94.6	94.5	6.5	2.4	2.5	69	0.7	395
FLSN 280 S	75	1483	483	136	0.68	0.79	0.84	93	94.8	94.9	7.7	2.9	3	94	0.815	475
FLSN 280 M	90	1478	582	161	0.73	0.82	0.85	94.2	95	95	7.6	3	3.1	112	1.015	565
FLSN 315 ST	110	1482	709	202	0.71	0.80	0.83	93.7	94.5	94.8	7.3	2.9	2.7	140	1.83	850
FLSN 315 M	132	1489	847	248	0.68	0.77	0.81	92.7	94.3	95	8	2.8	2.6	172	2.91	1000
FLSN 315 LA	160	1486	1028	284	0.73	0.82	0.85	94.6	95.6	95.8	7.5	2.2	2.4	197	3.4	1050
FLSN 315 LB	200	1487	1291	367	0.68	0.78	0.82	95.1	95.9	96	8	2.2	2.3	254	3.4	1150
FLSN 355 LA	250	1487	1606	425	0.81	0.86	0.88	95.5	96.3	96.5	7.4	1.7	2.3	294	6.2	1510
FLSN 355 LB	300	1489	1924	517	0.79	0.85	0.87	95.5	96.1	96.3	6.5	1.6	1.6	358	6.2	1550
FLSN 355 LC	315	1490	2019	554	0.76	0.82	0.85	95.5	96.3	96.5	7.4	2.2	2.2	384	6.5	1800
FLSN 355 LC	355	1489	2277	616	0.77	0.83	0.86	95.8	96.6	96.8	6.6	1.9	1.9	427	6.5	1800
FLSN 355 LD	400	1489	2565	686	0.77	0.84	0.87	95.7	96.6	96.8	7.4	2.1	2.1	475	7.4	1930

• Class F temperature rise

For power ratings above 400 kW, please consult Leroy-Somer.

FLSN non-sparking 3-phase TEFV induction motors Electrical characteristics

D2 - Selection data: single-speed

4 Poles 1500 min^{-1}

	MAINS SUPPLY 380 V 50 Hz					MAINS SUPPLY 415 V 50 Hz				MAINS SUPPLY 460 V can be used from 440V to 480V 60 Hz				
	Rated power at 50 Hz	Rated speed	Rated current	Power factor	Efficiency	Rated speed	Rated current	Power factor	Efficiency	Rated power at 60 Hz	Rated speed	Rated current	Power factor	Efficiency
Type	P_N kW	N_N min^{-1}	I_N A	Cos φ	η %	N_N min^{-1}	I_N A	Cos φ	η %	P_N kW	N_N min^{-1}	I_N A	Cos φ	η %
FLSN 80 L	0.55	1390	1.6	0.78	69	1415	1.6	0.70	68	0.66	1705	1.55	0.75	72
FLSN 80 L	0.75	1415	2	0.78	72.6	1430	2.1	0.71	71.2	0.9	1730	2	0.75	74.4
FLSN 90 S	1.1	1416	2.6	0.86	75.5	1437	2.5	0.81	77.2	1.3	1726	2.5	0.84	78.9
FLSN 90 L	1.5	1417	3.4	0.86	77.9	1436	3.4	0.79	78.4	1.8	1722	3.3	0.84	80.4
FLSN 90 L	1.8	1427	4.1	0.84	79.4	1443	4	0.78	80.1	2.2	1733	4.1	0.82	81
FLSN 100 LK	2.2	1450	4.7	0.85	83.2	1462	4.5	0.81	83.9	2.6	1755	4.6	0.84	84.8
FLSN 100 LK	3	1448	6.4	0.85	84.3	1460	6.2	0.80	84.7	3.6	1752	6.3	0.83	85.9
FLSN 112 M	4	1455	8.5	0.84	85	1464	8.4	0.78	84.7	4.8	1753	8.4	0.83	86.1
FLSN 132 S	5.5	1444	11.4	0.85	86.5	1455	11	0.81	86	6.6	1750	11.2	0.85	87
FLSN 132 M	7.5	1445	15.8	0.85	85	1455	15	0.82	85	9	1750	15.5	0.85	87
FLSN 132 M	9	1440	17.4	0.90	86.9	1455	16.6	0.88	87.9	11	1750	17	0.88	88.7
FLSN 160 M	11	1447	21.6	0.88	88	1459	21	0.84	88.7	12.6	1747	20	0.88	87.8
FLSN 160 L	15	1447	29.1	0.88	89	1459	28	0.84	89.7	17.2	1747	28	0.88	88.8
FLSN 180 MR	18.5	1457	36.1	0.88	88.5	1469	34	0.84	90.2	21	1757	34	0.88	88.3
FLSN 180 L	22	1460	41.7	0.88	91.1	1465	40	0.84	91.5	25	1760	39	0.88	90.9
FLSN 200 L	30	1467	58	0.86	91.4	1472	55	0.83	91.6	34.5	1767	55	0.86	91.2
FLSN 225 ST	37	1472	70	0.86	93.4	1477	69	0.80	93	42.4	1773	66	0.86	93.2
FLSN 225 M	45	1478	82	0.88	94.2	1483	78	0.85	94.4	52	1783	82	0.85	94.2
FLSN 250 M	55	1476	102	0.87	94.6	1481	100	0.81	94.3	63	1776	96	0.87	94.4
FLSN 280 S	75	1480	140	0.86	94.8	1484	136	0.81	94.4	86	1780	133	0.86	94.5
FLSN 280 M	90	1477	167	0.86	95.4	1481	158	0.83	95.4	103	1777	158	0.86	95.2
FLSN 315 ST	110	1479	207	0.85	94.8	1487	194	0.83	95.1	125	1779	195	0.85	94.6
FLSN 315 M	132	1487	254	0.83	95.1	1488	249	0.78	94.4	150	1787	239	0.83	94.9
FLSN 315 LA	160	1485	291	0.87	95.9	1487	284	0.82	95.7	185	1785	279	0.87	95.7
FLSN 315 LB	200	1486	362	0.87	96.4	1492	357	0.81	96.1	230	1786	344	0.87	96.4
FLSN 355 LA	250	1485	443	0.89	96.4	1488	415	0.87	96.4	285	1785	417	0.89	96.4
FLSN 355 LB	300	1487	545	0.87	96.1	1490	498	0.87	96.3	345	1787	519	0.87	95.9
FLSN 355 LC	315	1488	577	0.86	96.4	1491	548	0.83	96.4	360	1780	546	0.86	96.2
FLSN 355 LC	355	1487	641	0.87	96.7	1490	608	0.84	96.7	405	1787	605	0.87	96.5
FLSN 355 LD	400	1488	722	0.87	96.7	1490	685	0.84	96.7	460	1788	688	0.87	96.5

For power ratings above 400 kW, please consult Leroy-Somer.

FLSN non-sparking 3-phase TEFV induction motors Electrical characteristics

D2 - Selection data: FLSN cast iron motors

6 Poles 1000 min^{-1}

EEx nA II T3

IP 55
Cl. F - ΔT 80 K
400 V +/- 10%

MAINS SUPPLY Δ 230 / Y 400 V or **Δ 400 V** **50 Hz**

Type	Rated power at 50 Hz	Rated speed	Rated torque	Rated current	Power factor			Efficiency			Starting current/ Rated current	Starting torque/ Rated torque	Max. torque/ Rated torque	Rated apparent power	Moment of inertia	Weight
	P_N kW	N_N min^{-1}	C_N N.m	$I_{N\ (400V)}$ A	Cos φ 50%	75%	100%	η 50%	75%	100%	I_D/I_N	M_D/M_N	M_M/M_N	kVA_N	J kg.m^2	IM B3 kg
FLSN 80 L	0.25	950	2.5	0.8	0.55	0.68	0.74	54	58	60.3	3.6	2	1.9	0.6	0.0024	14
FLSN 80 L	0.37	940	3.7	1.2	0.55	0.68	0.74	55	59	61	3.8	1.9	2.1	0.8	0.0032	15
FLSN 80 L	0.55	955	5.5	1.8	0.46	0.59	0.67	60	64	65	4.4	2.5	2.6	1.3	0.0042	16
FLSN 90 S	0.75	940	7.5	2.1	0.65	0.75	0.8	60	64	65.2	3.5	2	2.2	1.4	0.0039	21
FLSN 90 L	1.1	940	11	2.7	0.66	0.76	0.81	70	73	73.5	4.8	1.8	2.2	1.8	0.0048	23
FLSN 100 LK	1.5	955	15	3.5	0.61	0.72	0.78	76	78	78.3	6.3	2.2	2.8	2.5	0.0134	41
FLSN 112 M	2.2	960	22	5.2	0.59	0.71	0.77	79	80	80	5.5	2.3	2.4	3.6	0.015	45
FLSN 132 S	3	953	30	6.9	0.63	0.71	0.76	80	82.2	81.9	5.3	2.2	2.4	4.7	0.0376	71
FLSN 132 M	4	970	40	9	0.61	0.72	0.78	81	82	82.1	6.7	2.8	2.7	6.2	0.0517	76
FLSN 132 MU	5.5	970	54	12.2	0.63	0.74	0.79	81	82	82.1	7.1	3.2	2.7	8.5	0.0595	88
FLSN 160 M	7.5	968	74	16	0.65	0.75	0.80	84.9	86.4	86	5	1.5	2.4	11	0.085	100
FLSN 160 L	11	966	109	23	0.66	0.76	0.81	85.9	87.4	87	5	1.5	2.4	16	0.12	128
FLSN 180 L	15	974	147	30	0.67	0.77	0.82	88.3	89.7	89.5	7.1	2.1	3.1	21	0.2	170
FLSN 200 LA	18.5	975	181	36	0.68	0.78	0.83	88.9	90.5	90.7	7	2.2	3.3	25	0.29	240
FLSN 200 LB	22	973	216	43	0.66	0.76	0.81	89.7	91.3	91.5	7	2.2	3.3	30	0.31	260
FLSN 225 M	30	978	293	59	0.64	0.74	0.80	92.3	93.3	92	6	2	2.4	41	0.94	392
FLSN 250 M	37	977	362	72	0.66	0.76	0.80	91.6	92.6	92.5	6.2	2.2	2.6	50	0.94	394
FLSN 280 S	45	971	440	83	0.7	0.80	0.84	92	93.1	93	6	1.9	2.3	58	1.13	455
FLSN 280 M	55	977	538	108	0.65	0.75	0.79	92	93.1	93	6.9	2.8	3.3	75	1.26	532
FLSN 315 ST	75	987	726	133	0.77	0.84	0.86	94.2	94.9	94.8	6.5	2.3	2.1	92	1.8	850
FLSN 315 M	90	987	871	160	0.76	0.83	0.85	95	95.7	95.6	6.7	1.7	1.5	111	2.6	1000
FLSN 315 LA	110	983	1069	198	0.76	0.83	0.85	93.9	94.6	94.5	6	1.5	1.3	137	2.6	1050
FLSN 315 LB	132	988	1276	239	0.74	0.81	0.83	95.3	96	95.9	7.4	2	1.8	166	3.5	1125
FLSN 315 LB	150	986	1453	276	0.76	0.81	0.82	95.7	96.1	95.8	6.6	1.5	2.5	191	3.5	1125
FLSN 355 LA	185	987	1790	344	0.68	0.77	0.81	94.8	95.7	95.8	7.5	2	3.3	238	5.4	1415
FLSN 355 LB	220	988	2127	410	0.68	0.77	0.81	94.5	95.5	95.6	7.4	1.9	3.1	284	6.3	1535
FLSN 355 LD	250	993	2404	455	0.72	0.79	0.82	95.3	95.8	95.8	7.8	2.1	2.3	315	8.6	1935
FLSN 355 LD	300	992	2888	555	0.72	0.79	0.82	94.7	95.2	95.2	6.8	1.65	1.8	386	8.6	1935

For power ratings above 300 kW, please consult Leroy-Somer.

FLSN non-sparking 3-phase TEFV induction motors Electrical characteristics

D2 - Selection data: single-speed

6 Poles 1000 min^{-1}

	MAINS SUPPLY 380 V 50 Hz					MAINS SUPPLY 415 V 50 Hz				MAINS SUPPLY 460 V (can be used from 440V to 480V) 60 Hz				
	Rated power at 50 Hz	Rated speed	Rated current	Power factor	Efficiency	Rated speed	Rated current	Power factor	Efficiency	Rated power at 60 Hz	Rated speed	Rated current	Power factor	Efficiency
Type	P_N kW	N_N min^{-1}	I_N A	Cos φ	η %	N_N min^{-1}	I_N A	Cos φ	η %	P_N kW	N_N min^{-1}	I_N A	Cos φ	η %
FLSN 80 L	0.25	940	0.8	0.78	60.4	950	0.8	0.71	60	0.3	1145	0.8	0.74	64.2
FLSN 80 L	0.37	940	1.2	0.77	63.5	955	1.2	0.7	64	0.45	1145	1.2	0.76	63.5
FLSN 80 L	0.55	945	1.8	0.72	66.3	960	1.8	0.65	64	0.66	1150	1.8	0.68	68.8
FLSN 90 S	0.75	930	2.1	0.83	66.3	945	2	0.79	64.6	0.9	1140	2	0.78	73.6
FLSN 90 L	1.1	935	2.8	0.83	72.9	950	2.7	0.78	73.5	1.3	1145	2.6	0.81	76.2
FLSN 100 LK	1.5	950	3.7	0.8	78	960	3.5	0.76	78.1	1.8	1160	3.6	0.78	80.3
FLSN 112 M	2.2	950	5.3	0.8	78.5	965	5.1	0.75	79.5	2.6	1155	5.1	0.78	81.3
FLSN 132 S	3	943	7.1	0.79	81.1	957	6.9	0.74	81.7	3.6	1145	7	0.78	82.7
FLSN 132 M	4	965	9.3	0.8	81.9	970	9.1	0.75	82	4.8	1170	9	0.8	83.7
FLSN 132 MU	5.5	965	11.2	0.81	92.1	975	12.3	0.76	81.9	6.6	1160	12.3	0.81	83.1
FLSN 160 M	7.5	959	16.4	0.82	84.9	970	15.9	0.77	85.2	8.6	1159	15.6	0.82	84.7
FLSN 160 L	11	960	23	0.84	87.2	969	22	0.79	87	12.6	1169	23	0.79	87
FLSN 180 L	15	970	30	0.86	89	977	29	0.81	89.6	17	1170	28	0.86	88.8
FLSN 200 LA	18.5	971	37	0.85	90.7	976	35	0.82	90.7	21	1171	34	0.85	90.5
FLSN 200 LB	22	970	45	0.82	91.4	977	43	0.78	91.3	25	1170	42	0.82	91.2
FLSN 225 M	30	974	61	0.82	91.6	980	58	0.78	92	34.5	1174	58	0.82	91.4
FLSN 250 M	37	973	75	0.81	92.4	979	72	0.78	92.1	42	1173	71	0.81	92.2
FLSN 280 S	45	967	87	0.85	92.6	972	83	0.82	92.6	52	1167	85	0.84	91.9
FLSN 280 M	55	973	110	0.82	92.6	978	107	0.77	93	63	1173	104	0.82	92.4
FLSN 315 ST	75	986	137	0.88	94.6	988	128	0.86	94.8	85	1188	131	0.86	94.6
FLSN 315 M	90	985	165	0.87	95.5	988	156	0.84	95.5	105	1185	159	0.87	95.3
FLSN 315 LA	110	981	206	0.86	94.6	985	198	0.82	94.6	125	1185	203	0.82	94.4
FLSN 315 LB	132	986	250	0.84	95.8	989	243	0.79	95.7	150	1186	235	0.84	95.6
FLSN 315 LB	150	988	284	0.84	95.8	990	277	0.79	95.6	170	1188	266	0.84	95.6
FLSN 355 LA	185	983	345	0.85	96	988	357	0.76	95.1	210	1184	328	0.84	95.8
FLSN 355 LB	220	985	418	0.84	95.4	988	413	0.78	95.1	250	1185	393	0.84	95.2
FLSN 355 LD	250	991	477	0.83	95.8	994	450	0.8	96.7	287	1191	450	0.83	96.5
FLSN 355 LD	300	990	571	0.84	95.1	993	549	0.8	95.2	345	1190	544	0.84	94.9

For power ratings above 300 kW, please consult Leroy-Somer.

FLSN non-sparking 3-phase TEFV induction motors Electrical characteristics

D2 - Selection data: FLSN cast iron motors

8 Poles 750 min^{-1}

EEx nA II T3

IP 55
Cl. F - ΔT 80 K
400 V +/- 10%

MAINS SUPPLY Δ 230 / Y 400 V or **Δ 400 V** **50 Hz**

Type	Rated power at 50 Hz	Rated speed	Rated torque	Rated current	Power factor			Efficiency			Starting current/ Rated current	Starting torque/ Rated torque	Max. torque/ Rated torque	Rated apparent power	Moment of inertia	Weight
	P_N kW	N_N min^{-1}	C_N N.m	$I_{N\ (400V)}$ A	Cos φ 50%	75%	100%	η 50%	75%	100%	I_D/I_N	M_D/M_N	M_M/M_N	kVA_N	J kg.m^2	IM B3 kg
FLSN 80 L	0.18	710	2.5	0.8	0.46	0.58	0.64	45	51	52.3	3	1.6	1.6	0.5	0.0031	14
FLSN 80 L	0.25	720	3.4	1.1	0.44	0.55	0.6	46	54	54.5	3.2	2	2.3	0.8	0.0041	16
FLSN 90 S	0.37	685	5	1.2	0.46	0.63	0.71	59	63	64	3.5	1.7	1.7	0.9	0.0038	21
FLSN 90 L	0.55	695	7.5	1.7	0.46	0.63	0.72	54	63.7	63	3.3	1.8	1.8	1.2	0.0047	23
FLSN 100 LK	0.75	720	10	2.3	0.47	0.6	0.68	66	70	70.9	4.1	1.9	1.9	1.6	0.0085	41
FLSN 100 LK	1.1	720	15	3.8	0.44	0.56	0.62	60	66	68	4.1	1.8	2.3	2.6	0.0117	43
FLSN 112 M	1.5	725	20	4.8	0.45	0.57	0.63	68	72	72.5	4	2.1	2.2	3.3	0.015	45
FLSN 132 S	2.2	715	30	7.2	0.44	0.55	0.6	72	74	74	3.2	1.4	1.8	5	0.0253	71
FLSN 132 M	3	705	40	9.1	0.46	0.57	0.63	73	76	76	3.1	1.3	1.9	6.3	0.0334	81
FLSN 160 MA	4	710	54	11.3	0.44	0.56	0.63	80.1	82	81.5	3.8	1.4	1.7	7.8	0.062	105
FLSN 160 MB	5.5	710	74	15	0.46	0.58	0.65	80.6	82.5	82	3.8	1.4	1.7	10.4	0.071	111
FLSN 160 L	7.5	715	100	20	0.46	0.58	0.65	81.6	93.5	83	3.8	1.5	1.8	14	0.086	128
FLSN 180 L	11	724	147	27	0.51	0.63	0.7	82.4	84.9	85.1	3.9	1.4	1.7	19	0.21	175
FLSN 200 L	15	729	197	34	0.53	0.66	0.72	86.2	88	88.1	5	1.8	2.6	24	0.32	265
FLSN 225 ST	18.5	727	243	41	0.54	0.67	0.73	87.1	88.9	89	5	1.6	2.3	29	0.38	285
FLSN 225 M	22	732	287	48	0.58	0.68	0.72	91.7	92.6	92.1	5.9	1.8	2.5	33	0.83	388
FLSN 250 M	30	729	393	61	0.64	0.74	0.78	90.8	91.7	91.2	6.2	1.8	2.5	42	0.83	393
FLSN 280 S	37	723	489	74	0.64	0.74	0.78	91	92.1	92	4.5	1.3	1.8	51	1.4	472
FLSN 280 M	45	730	589	101	0.55	0.66	0.7	90.7	91.8	91.7	6	2.3	3.2	70	1.75	563
FLSN 315 ST	55	738	712	102	0.71	0.8	0.83	94	94.5	94.2	7.4	2.1	3	71	2.7	850
FLSN 315 M	75	743	964	146	0.68	0.76	0.78	94.3	95	94.8	7.4	2	2.2	101	3.1	1000
FLSN 315 LA	90	742	1158	176	0.68	0.76	0.78	94.2	94.9	94.7	6.7	1.9	2.1	122	4.2	1030
FLSN 315 LB	110	742	1416	220	0.66	0.74	0.76	94.3	95	94.8	7.2	2	2.2	152	5.1	1125
FLSN 355 LA	132	741	1701	256	0.68	0.75	0.78	94.2	95.2	95.3	6.7	2	2.2	177	5.5	1415
FLSN 355 LB	160	741	2062	311	0.68	0.75	0.78	94.2	95.2	95.3	6.9	2	2.2	215	6	1535
FLSN 355 LD	200	741	2578	362	0.74	0.81	0.84	93.9	94.9	95	6.7	1.6	1.7	251	6.5	1935

For power ratings above 200 kW, please consult Leroy-Somer.

FLSN non-sparking 3-phase TEFV induction motors Electrical characteristics

D2 - Selection data: single-speed

8 Poles 750 min^{-1}

	MAINS SUPPLY 380 V 50 Hz					MAINS SUPPLY 415 V 50 Hz				MAINS SUPPLY 460 V can be used from 440V to 480V 60 Hz				
	Rated power at 50 Hz	Rated speed	Rated current	Power factor	Efficiency	Rated speed	Rated current	Power factor	Efficiency	Rated power at 60 Hz	Rated speed	Rated current	Power factor	Efficiency
Type	P_N kW	N_N min^{-1}	I_N A	Cos φ	η %	N_N min^{-1}	I_N A	Cos φ	η %	P_N kW	N_N min^{-1}	I_N A	Cos φ	η %
FLSN 80 L	0.18	700	0.8	0.66	53	710	0.8	0.61	52	0.22	860	0.8	0.62	56.2
FLSN 80 L	0.25	710	1.1	0.63	56	720	1.2	0.57	53.1	0.3	870	1.1	0.59	58.8
FLSN 90 S	0.37	670	1.2	0.75	63	700	1.2	0.69	62	0.45	835	1.2	0.71	66.5
FLSN 90 L	0.55	680	1.8	0.74	62	700	1.8	0.67	64	0.66	810	1.8	0.71	66.5
FLSN 100 LK	0.75	715	2.3	0.71	70.6	720	2.3	0.66	69.9	0.9	870	2.2	0.7	72.6
FLSN 100 LK	1.1	710	3.6	0.68	68	720	3.9	0.6	65	1.3	870	3.6	0.64	71.5
FLSN 112 M	1.5	715	4.7	0.67	72.3	725	4.9	0.6	70.9	1.8	870	4.7	0.65	74.3
FLSN 132 S	2.2	710	7.6	0.6	73.5	720	8.0	0.53	72	2.6	855	7.3	0.59	75.5
FLSN 132 M	3	695	9.5	0.64	75	710	9.8	0.57	75	3.6	850	10.2	0.59	75
FLSN 160 MA	4	706	11.4	0.65	81.8	714	11.1	0.61	82.1	4.6	851	10.9	0.64	83.1
FLSN 160 MB	5.5	706	16	0.67	79.4	714	16	0.62	79.7	6.3	857	15	0.66	82.2
FLSN 160 L	7.5	707	21	0.67	82.4	718	20	0.62	82.4	8.6	859	19	0.66	84.1
FLSN 180 L	11	720	27	0.73	85.1	726	28	0.66	84.4	12.5	870	25	0.73	84.9
FLSN 200 L	15	729	34	0.76	88.6	730	35	0.68	87.7	17	879	32	0.76	87.6
FLSN 225 ST	18.5	723	41	0.76	89.5	729	42	0.69	89.9	21	876	40	0.73	90.9
FLSN 225 M	22	731	47	0.77	92.2	734	47	0.71	92.1	25	881	44	0.77	92
FLSN 250 M	30	725	63	0.8	90.5	731	61	0.75	90.8	34	875	59	0.80	90.3
FLSN 280 S	37	716	78	0.79	91.4	725	72	0.78	92.1	42	866	73	0.79	91.2
FLSN 280 M	45	727	101	0.74	91.8	734	97	0.70	91.9	52	879	97	0.73	92.3
FLSN 315 ST	55	737	104	0.85	94.2	740	100	0.82	93.8	65	884	100	0.87	93.8
FLSN 315 M	75	742	149	0.81	94.8	743	146	0.76	94.1	85	892	139	0.81	94.6
FLSN 315 LA	90	741	178	0.81	94.8	743	174	0.76	94.7	105	891	172	0.81	94.9
FLSN 315 LB	110	741	223	0.79	94.9	743	218	0.74	94.9	125	891	210	0.79	94.7
FLSN 355 LA	132	740	267	0.79	95.3	743	253	0.76	95.5	150	890	251	0.79	95.1
FLSN 355 LB	160	740	323	0.79	95.3	743	307	0.76	95.5	185	889	310	0.79	94.9
FLSN 355 LD	200	740	377	0.85	95	743	356	0.82	95.3	230	890	359	0.85	94.8

For power ratings above 200 kW, please consult Leroy-Somer.

FLSN non-sparking
3-phase TEFV induction motors
Electrical characteristics

D

E1 - Dimensions: LSN aluminium motors

PAGE

E1 - Dimensions: LSN aluminium motors

Dimensions in millimetres

– Shaft extensions

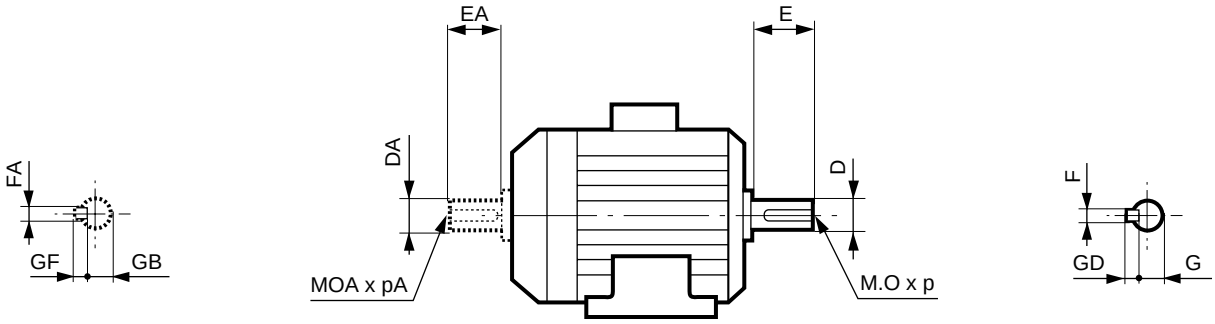

Type	Main shaft extensions													
	4, 6 and 8 poles							2 poles						
	F	GD	D	G	E	O	p	F	GD	D	G	E	O	p
LSN 80 L	6	6	19j6	15.5	40	6	16	6	6	19j6	15.5	40	6	16
LSN 90 S/L	8	7	24j6	20	50	8	19	8	7	24j6	20	50	8	19
LSN 100 L	8	7	28j6	24	60	10	22	8	7	28j6	24	60	10	22
LSN 112 M/MG	8	7	28j6	24	60	10	22	8	7	28j6	24	60	10	22
LSN 132 S/M	10	8	38k6	33	80	12	28	10	8	38k6	33	80	12	28
LSN 160 M/L/MP/LR	12	8	42k6	37	110	16	36	12	8	42k6	37	110	16	36
LSN 180 MT/LR/L	14	9	48k6	42.5	110	16	36	14	9	48k6	42.5	110	16	36
LSN 200 LT/L	16	10	55m6	49	110	20	42	16	10	55m6	49	110	20	42
LSN 225 ST/MR	18	11	60m6	53	140	20	42	16	10	55m6	49	110	20	42

Type	Secondary shaft extensions													
	4, 6 and 8 poles							2 poles						
	FA	GF	DA	GB	EA	OA	pA	FA	GF	DA	GB	EA	OA	pA
LSN 80 L	5	5	14j6	11	30	5	15	5	5	14j6	11	30	5	15
LSN 90 S/L	6	6	19j6	15.5	40	6	16	6	6	19j6	15.5	40	6	16
LSN 100 L	8	7	24j6	20	50	8	19	8	7	24j6	20	50	8	19
LSN 112 M/MG	8	7	24j6	20	50	8	19	8	7	24j6	20	50	8	19
LSN 132 S/M	8	7	28j6	24	60	10	22	8	7	28j6	24	60	10	22
LSN 160 MP/LR	10	8	38k6	33	80	12	28	10	8	38k6	33	80	12	28
LSN 160 M/L	12	8	42k6	37	110	16	36	12	8	42k6	37	110	16	36
LSN 180 MT/LR/L	14	9	48k6	42.5	110	16	36	14	9	48k6	42.5	110	16	36
LSN 200 LT/L	16	10	55m6	49	110	20	42	16	10	55m6	49	110	20	42
LSN 225 ST/MR	18	11	60m6	53	140	20	42	16	10	55m6	49	110	20	42

LSN non-sparking 3-phase TEFV induction motors Dimensions

E1 - Dimensions: LSN aluminium motors

Dimensions in millimetres

– Foot mounting IM B3 (IM 1001)

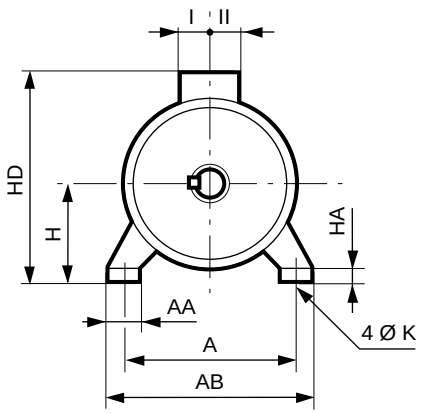

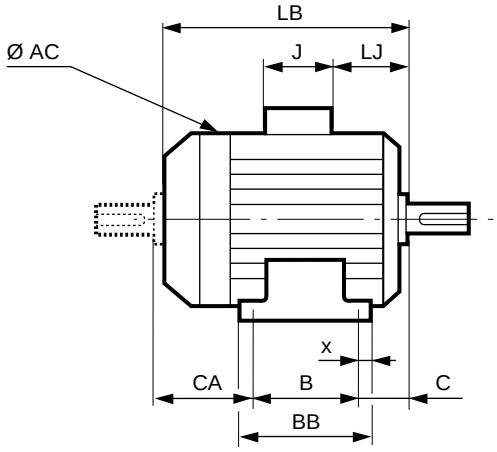

Type	Main dimensions																	
	A	AB	B	BB	C	X	AA	K	HA	H	AC	HD	LB	LJ	J	I	II	CA
LSN 80 L	125	157	100	120	50	10	29	9	10	80	170	203	215	15	160	55	55	68
LSN 90 S	140	172	100	120	56	10	37	10	11	90	190	223	218	15	160	55	55	66
LSN 90 L	140	172	125	162	56	28	37	10	11	90	190	223	245	15	160	55	55	68
LSN 100 L	160	196	140	165	63	12	40	12	13	100	200	238	290	15	160	55	55	93
LSN 112 M	190	220	140	165	70	12	45	12	14	112	200	250	290	24	160	55	55	86
LSN 112 MG	190	220	140	165	70	12	52	12	14	112	235	260	315	24	160	55	55	110
LSN 132 S	216	250	140	170	89	16	50	12	15	132	235	280	350	41	160	55	55	128
LSN 132 SM/M	216	250	178	208	89	16	59	12	18	132	280	307	387	25	160	55	55	126
LSN 160 MP	254	294	210	294	108	20	64	14.5	25	160	264	368	468	55.5	160	55	55	154
LSN 160 M	254	294	210	294	108	20	60	14.5	25	160	310	395	495	44	134	92	63	182
LSN 160 LR	254	294	254	294	108	20	64	14.5	25	160	264	368	495	55.5	160	55	55	138
LSN 160 L	254	294	254	294	108	20	60	14.5	25	160	310	395	495	44	134	92	63	138
LSN 180 MT	279	324	241	316	121	20	79	14.5	28	180	310	428	495	45	205	100	95	138
LSN 180 LR	279	324	279	316	121	20	79	14.5	28	180	310	428	520	45	205	100	95	125
LSN 180 L	279	339	279	329	121	25	86	14.5	25	180	350	435	552	54	205	100	95	159
LSN 200 LT	318	378	305	365	133	30	108	18.5	32	200	350	455	599	60	205	100	95	167
LSN 200 L	318	388	305	375	133	35	103	18.5	36	200	390	475	621	68	205	100	95	194
LSN 225 ST	356	431	286	386	149	50	127	18.5	36	225	390	500	628	74	205	100	95	203
LSN 225 MR	356	431	311	386	149	50	127	18.5	36	225	390	500	676	74	205	100	95	228

LSN non-sparking
3-phase TEFV induction motors
Dimensions

E1 - Dimensions: LSN aluminium motors

Dimensions in millimetres

– Foot and flange mounting IM B35 (IM 2001)

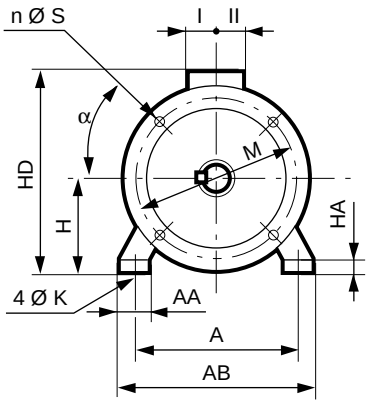

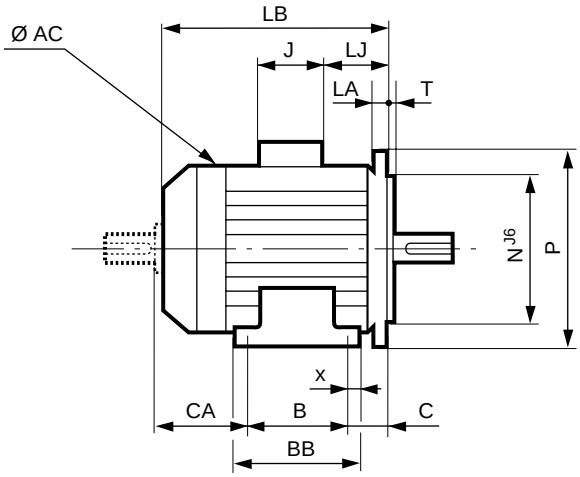

Type	Main dimensions																	
	A	AB	B	BB	C	X	AA	K	HA	H	AC	HD	LB	LJ	J	I	II	Sym.
LSN 80 L	125	157	100	120	50	10	29	9	10	80	170	203	215	15	160	55	55	FF 165
LSN 90 S	140	172	100	120	76	10	37	10	11	90	190	223	238	15	160	55	55	FF 165
LSN 90 L	140	172	125	162	56	8	37	10	11	90	190	223	265	15	160	55	55	FF 165
LSN 100 L	160	196	140	165	63	12	40	12	13	100	200	238	290	15	160	55	55	FF 215
LSN 112 M	190	220	140	165	70	12	45	12	14	112	200	250	290	24	160	55	55	FF 215
LSN 112 MG	190	220	140	165	70	12	52	12	14	112	235	260	315	24	160	55	55	FF 215
LSN 132 S	216	250	140	170	89	16	50	12	15	132	235	280	350	41	160	55	55	FF 265
LSN 132 SM/M	216	250	178	208	89	16	59	12	18	132	280	307	387	25	160	55	55	FF 265
LSN 160 MP	254	294	210	294	108	20	64	14.5	25	160	264	368	468	55.5	160	55	55	FF 300
LSN 160 M	254	294	210	294	108	20	60	14.5	25	160	310	395	495	44	134	92	63	FF 300
LSN 160 LR	254	294	254	294	108	20	64	14.5	25	160	264	368	495	55.5	160	55	55	FF 300
LSN 160 L	254	294	254	294	108	20	60	14.5	25	160	310	395	495	44	134	92	63	FF 300
LSN 180 MT	279	324	241	316	121	20	79	14.5	28	180	310	428	495	45	205	100	95	FF 300
LSN 180 LR	279	324	279	316	121	20	79	14.5	28	180	310	428	520	45	205	100	95	FF 300
LSN 180 L	279	339	279	329	121	25	86	14.5	25	180	350	435	552	54	205	100	95	FF 300
LSN 200 LT	318	378	305	365	133	30	108	18.5	32	200	350	455	599	60	205	100	95	FF 350
LSN 200 L	318	388	305	375	133	35	103	18.5	36	200	390	475	621	68	205	100	95	FF 350
LSN 225 ST	356	431	286	386	149	50	127	18.5	36	225	390	500	628	74	205	100	95	FF 400
LSN 225 MR	356	431	311	386	149	50	127	18.5	36	225	390	500	676	74	205	100	95	FF 400

Dimensions of CA and shaft extensions: see pages 34 and 35.

E1 - Dimensions: LSN aluminium motors

Dimensions in millimetres

– Flange mounting IM B5 (IM 3001)

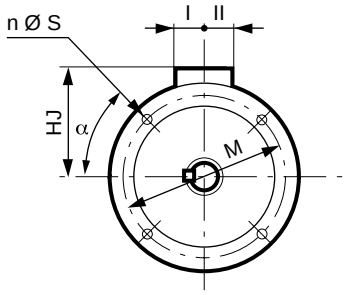

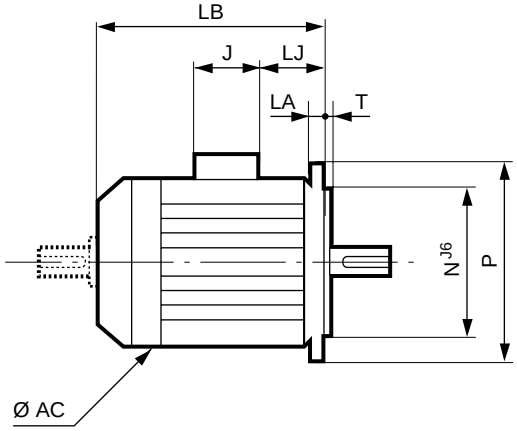

IEC symbol	Flange dimensions							
	M	N	P	T	n	α	S	LA
FF 165	165	130	200	3.5	4	45	12	10
FF 165	165	130	200	3.5	4	45	12	10
FF 165	165	130	200	3.5	4	45	12	10
FF 215	215	180	250	4	4	45	14.5	12
FF 215	215	180	250	4	4	45	14.5	12
FF 215	215	180	250	4	4	45	14.5	12
FF 265	265	230	300	4	4	45	14.5	14
FF 265	265	230	300	4	4	45	14.5	14
FF 300	300	250	350	5	4	45	18.5	14
FF 300	300	250	350	5	4	45	18.5	14
FF 300	300	250	350	5	4	45	18.5	14
FF 300	300	250	350	5	4	45	18.5	14
FF 300	300	250	350	5	4	45	18.5	14
FF 300	300	250	350	5	4	45	18.5	14
FF 300	300	250	350	5	4	45	18.5	14
FF 350	350	300	400	5	4	45	18.5	15
FF 350	350	300	400	5	4	45	18.5	15
FF 400	400	350	450	5	8	22.5	18.5	16
FF 400	400	350	450	5	8	22.5	18.5	16

	Main dimensions						
Type	AC	LB	HJ	LJ	J	I	II
LSN 80 L	170	215	123	15	160	55	55
LSN 90 S	190	238	133	15	160	55	55
LSN 90 L	190	265	133	15	160	55	55
LSN 100 L	200	290	138	15	160	55	55
LSN 112 M	200	290	138	24	160	55	55
LSN 112 MG	235	315	148	24	160	55	55
LSN 132 S	235	350	148	41	160	55	55
LSN 132 SM/M	280	387	175	25	160	55	55
LSN 160 MP	264	468	208	55.5	160	55	55
LSN 160 M	316	495	235	44	134	92	63
LSN 160 LR	264	495	208	55.5	160	55	55
LSN 160 L	316	495	235	44	134	92	63
LSN 180 MT	316	495	248	45	205	100	95
LSN 180 LR	316	520	248	45	205	100	95
LSN 180 L	350	552	255	54	205	100	95
LSN 200 LT	350	599	255	60	205	100	95
LSN 200 L	390	621	275	68	205	100	95
LSN 225 ST	390	628	275	74	205	100	95
LSN 225 MR	390	676	275	74	205	100	95

Dimensions of shaft extensions: see page 34.

E1 - Dimensions: LSN aluminium motors

Dimensions in millimetres

– Foot and face mounting IM B34 (IM 2101)

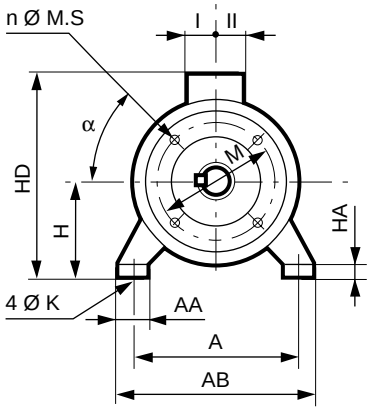

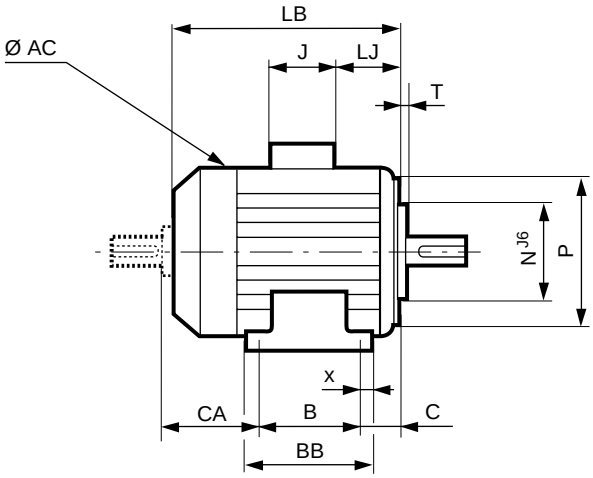

Type	Main dimensions																	
	A	AB	B	BB	C	X	AA	K	HA	H	AC	HD	LB	LJ	J	I	II	Sym.
LSN 80 L	125	157	100	120	50	10	29	9	10	80	170	203	215	15	160	55	55	FT 100
LSN 90 S	140	172	100	120	56	10	37	10	11	90	190	223	218	15	160	55	55	FT 115
LSN 90 L	140	172	125	162	56	28	37	10	11	90	190	223	245	15	160	55	55	FT 115
LSN 100 L	160	196	140	165	63	12	40	12	13	100	200	238	290	15	160	55	55	FT 130
LSN 112 M	190	220	140	165	70	12	45	12	14	112	200	250	290	24	160	55	55	FT 130
LSN 112 MG	190	220	140	165	70	12	52	12	14	112	235	260	315	24	160	55	55	FT 130
LSN 132 S	216	250	140	170	89	16	50	12	15	132	235	280	350	41	160	55	55	FT 215
LSN 132 SM/M	216	250	178	208	89	16	59	12	18	132	280	307	387	25	160	55	55	FT 215
LSN 160 MP	254	294	210	250	108	20	112	14	25	160	310	307	425	55.5	160	55	55	FT 265
LSN 160 LR	254	294	254	294	108	20	112	14	25	160	310	307	495	55.5	160	55	55	FT 265

Dimensions of CA and shaft extensions: see pages 34 and 35.

LSN non-sparking
3-phase TEFV induction motors
Dimensions

E1 - Dimensions: LSN aluminium motors

Dimensions in millimetres

– Face mounting IM B14 (IM 3601)

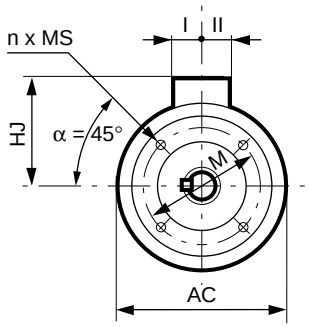

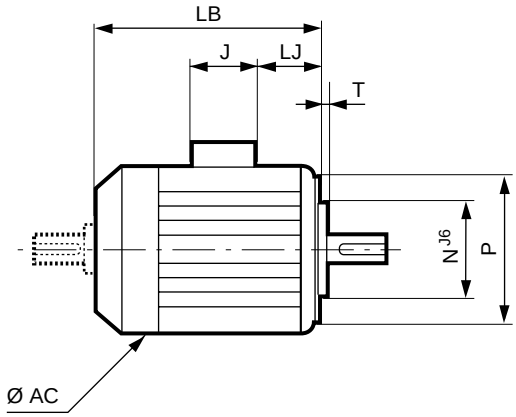

IEC symbol	Faceplate dimensions					
	M	N	P	T	n	MS
FT 100	100	80	120	3	4	M6
FT 115	115	95	140	3	4	M8
FT 115	115	95	140	3	4	M8
FT 130	130	110	160	3.5	4	M8
FT 130	130	110	160	3.5	4	M8
FT 130	130	110	160	3.5	4	M8
FT 215	215	180	250	4	4	M12
FT 215	215	180	250	4	4	M12
FT 265	265	230	300	4	4	M12
FT 265	265	230	300	4	4	M12

Type	Main dimensions						
	AC	LB	HJ	LJ	J	I	II
LSN 80 L	170	215	123	15	160	55	55
LSN 90 S	190	218	133	15	160	55	55
LSN 90 L	190	245	133	15	160	55	55
LSN 100 L	200	290	138	15	160	55	55
LSN 112 M	200	290	138	24	160	55	55
LSN 112 MG	235	315	148	24	160	55	55
LSN 132 S	235	350	148	41	160	55	55
LSN 132 SM/M	280	387	175	25	160	55	55
LSN 160 MP	310	425	208	55.5	160	55	55
LSN 160 LR	310	495	208	55.5	160	55	55

Dimensions of shaft extensions: see page 34.

LSN non-sparking 3-phase TEFV induction motors Dimensions

Optional features

Non-standard flanges

Motor type \ Flange type	(FF) Flange mounted											(FT) Face mounted								
	FF 100	FF 115	FF 130	FF 165	FF 215	FF 265	FF 300	FF 350	FF 400	FF 500	FF 600	FT 65	FT 75	FT 85	FT 100	FT 115	FT 130	FT 165	FT 215	FT 265
LSN 80		❍	❍	●	✶									✶	●	✶	✶	✶		
LSN 90		✶	✶	●	✶										✶	●	✶	❍		
LSN 90 (Foot)		❍	❍	❍	❍										✶	●	✶	❍		
LSN 90 (Foot)		❍	❍	❍	●											✶	✶	❍	✶	
LSN 112 M		❍	❍	❍	●											✶	●	❍	✶	
LSN 112 MG			❍	❍	●	✶										✶	●	✶	✶	
LSN 132 S				❍	✶	●											✶	✶	●	✶
LSN 132 SM/M				❍	❍	●	❍											✶	●	✶
LSN 160 MP/L/LR					✶	✶	●	✶											●	✶
LSN 180							●	✶												
LSN 200							✶	●	✶											
LSN 225									●	✶										

● Standard ❍ Modified bearing location ✶ Adaptable without modification : non-standard

Dimensions in millimetres

Drip cover for operation in vertical position, shaft end facing down

Type	LB'	Ø
80	LB + 20	145
90	LB + 20	185
100	LB + 20	185
112 M	LB + 20	185
112 MG	LB + 25	210
132 S	LB + 25	210
132 SM and M	LB + 30	240
160 MP-LR	LB + 30	240
160 M-L	LB + 36.5	265
180 MT-LR	LB + 36.5	265
180 L	LB + 36.5	305
200 LT	LB + 36.5	305
200 L	LB + 36.5	350
225 ST-MR	LB + 36.5	350

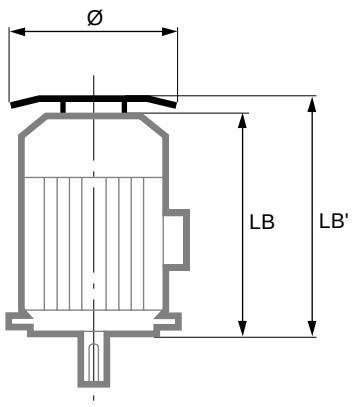

E2 - Dimensions: FLSN cast iron motors

PAGE

E2 - Dimensions: FLSN cast iron motors

Dimensions in millimetres

– Shaft extensions

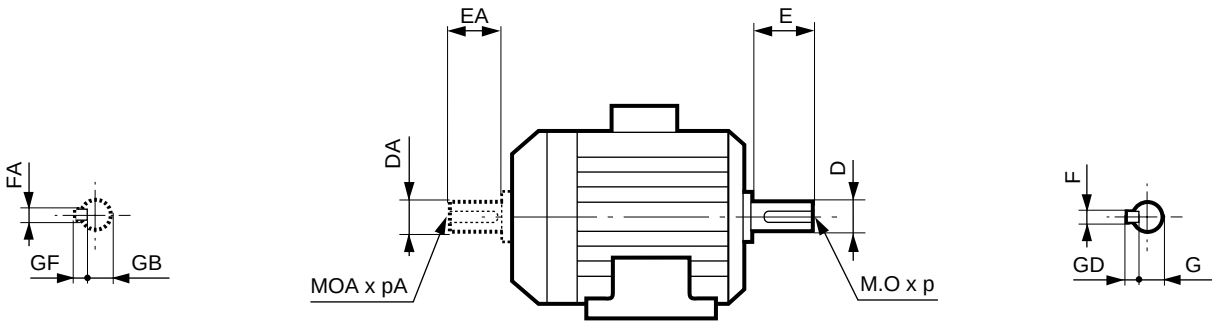

Type	Main shaft extension													
	4, 6 and 8 poles							2 poles						
	F	GD	D	G	E	O	p	F	GD	D	G	E	O	p
FLSN 80 L	6	6	19j6	15.5	40	6	16	6	6	19j6	15.5	40	6	16
FLSN 90 S/L	8	7	24j6	20	50	8	19	8	7	24j6	20	50	8	19
FLSN 100 LK	8	7	28j6	24	60	10	22	8	7	28j6	24	60	10	22
FLSN 112 M	8	7	28j6	24	60	10	22	8	7	28j6	24	60	10	22
FLSN 132 S/M/MR	10	8	38k6	33	80	12	28	10	8	38k6	33	80	12	28
FLSN 160 M/L	12	8	42k6	37	110	16	36	12	8	42k6	37	110	16	36
FLSN 180 MR/L	14	9	48k6	42.5	110	16	36	14	9	48k6	42.5	110	16	36
FLSN 200 L	16	10	55m6	49	110	20	42	16	10	55m6	49	110	20	42
FLSN 225 ST/MT/M	18	11	60m6	53	140	20	42	16	10	55m6	49	110	20	42
FLSN 250 M	18	11	65m6	58	140	20	42	18	11	60m6	53	140	20	42
FLSN 280 S/M	20	12	75m6	67.5	140	20	42	18	11	65m6	58	140	20	42
FLSN 315 ST	22	14	80m6	71	170	20	42	18	11	65m6	58	140	20	42
FLSN 315 M	22	14	80m6	71	170	20	42	18	11	65m6	58	140	20	42
FLSN 315 L	25	14	90m6	81	170	24	50	20	12	70m6	62.5	140	20	42
FLSN 355 L	28	16	100m6	90	210	24	50	22	14	80m6	71	170	20	42

Type	Main shaft extension													
	4, 6 and 8 poles							2 poles						
	F	GD	D	G	E	O	p	F	GD	D	G	E	O	p
FLSN 80 L	5	5	14j6	11	30	5	15	5	5	14j6	11	30	5	15
FLSN 90 S/L	6	6	19j6	15.5	40	6	16	6	6	19j6	15.5	40	6	16
FLSN 100 LK	8	7	24j6	20	50	8	19	8	7	24j6	20	50	8	19
FLSN 112 M	8	7	24j6	20	50	8	19	8	7	24j6	20	50	8	19
FLSN 132 S/M/MR	8	7	28j6	24	60	10	22	8	7	28j6	24	60	10	22
FLSN 160 M/L	12	8	42k6	37	110	16	36	12	8	42k6	37	110	16	36
FLSN 180 MR/L	14	9	48k6	42.5	110	16	36	14	9	48k6	42.5	110	16	36
FLSN 200 L	16	10	55m6	49	110	20	42	16	10	55m6	49	110	20	42
FLSN 225 ST/MT/M	18	11	60m6	53	140	20	42	16	10	55m6	49	110	20	42
FLSN 250 M	18	11	60m6	53	140	20	42	18	11	60m6	53	140	20	42
FLSN 280 S/M	20	12	60m6	53	140	20	42	18	11	65m6	58	140	20	42
FLSN 315 ST	22	14	80m6	71	170	20	42	18	11	65m6	58	140	20	42
FLSN 315 M	22	14	80m6	71	170	20	42	18	11	65m6	58	140	20	42
FLSN 315 L	25	14	90m6	81	170	24	50	20	12	70m6	62.5	140	20	42
FLSN 355 L/LD	28	16	100m6	90	210	24	50	22	14	80m6	71	170	20	42

E2 - Dimensions: FLSN cast iron motors

Dimensions in millimetres

– Foot mounting IM B3 (IM 1001)

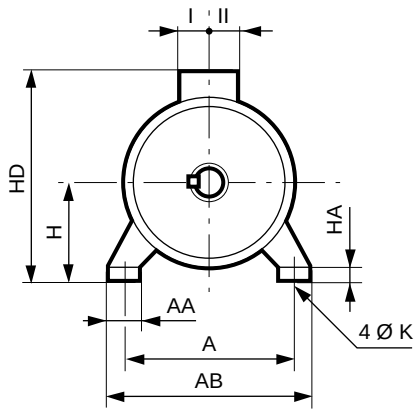

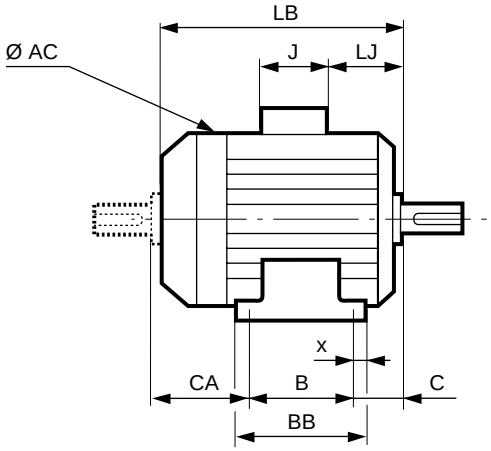

Type	Main dimensions																	
	A	AB	B	BB	C	X	AA	K	HA	H	AC	LB	CA	HD	LJ	J	I	II
FLSN 80 L	125	157	100	130	50	20	32	9	10	80	160	214	68	230	27	126	63	63
FLSN 90 S	140	172	100	160	56	22	34	10	11	90	185	243	93	250	22	126	63	63
FLSN 90 L	140	172	125	160	56	22	34	10	11	90	185	243	68	250	22	126	63	63
FLSN 100 LK	160	200	140	174	63	22	42	12	12	100	226	323	125	293	37	150	75	75
FLSN 112 M	190	230	140	174	70	22	45	12	12	112	226	323	119	305	37	150	75	75
FLSN 112 MR	190	230	140	174	70	22	45	12	12	112	226	344	142	305	37	150	75	75
FLSN 132 S	216	255	140	223	89	31	58	12	15	132	264	387	164	345	28	150	75	75
FLSN 132 M	216	255	178	223	89	31	58	12	15	132	264	387	126	345	28	150	75	75
FLSN 132 MR	216	255	178	223	89	31	58	12	15	132	264	410	149	345	28	150	75	75
FLSN 160 M	254	294	210	294	108	20	65	14	24	160	310	495	182	440	50	220	128	128
FLSN 160 L	254	294	254	294	108	20	65	14	24	160	310	495	138	440	50	220	128	128
FLSN 180 MR	279	324	241	295	121	25	80	14	28	180	310	515	158	460	50	220	128	128
FLSN 180 L	279	330	279	335	121	25	68	14	40	180	350	555	160	460	55	220	128	128
FLSN 200 L	318	374	305	361	133	28	80	18	50	200	394	681	248	515	65	220	128	128
FLSN 225 ST	356	420	286	367	149	28	100	18	35	225	394	681	251	540	65	220	128	128
FLSN 225 MT	356	420	311	367	149	28	100	18	35	225	394	681	226	540	65	220	128	128
FLSN 225 M	356	426	311	375	149	32	80	18	27	225	540	780	326	656	70	352	173	210
FLSN 250 M	406	476	349	413	168	32	80	22	27	250	540	780	269	681	70	352	173	210
FLSN 280 S	457	527	368	432	190	32	80	22	27	280	540	860	302	711	70	352	173	210
FLSN 280 M	457	537	419	483	190	32	80	22	27	280	540	960	357	711	70	352	173	210
FLSN 315 ST	508	598	406	547	216	45	90	27	45	315	556	1068	452	761	70	352	173	210
FLSN 315 M	508	600	457	598	216	45	100	27	45	315	624	1203	536	835	70	452	219	269
FLSN 315 L	508	600	508	598	216	45	100	27	45	315	624	1203	485	835	70	452	219	269
FLSN 355 LA/LB	610	710	630	710	254	40	110	27	35	355	700	1305	427	910	62	452	219	269
FLSN 355 LC/LD	610	710	630	710	254	40	110	27	35	355	700	1430	552	910	62	452	219	269

FLSN non-sparking 3-phase TEFV induction motors Dimensions

E2 - Dimensions: FLSN cast iron motors

Dimensions in millimetres

– Foot and flange mounting IM B35 (IM 2001)

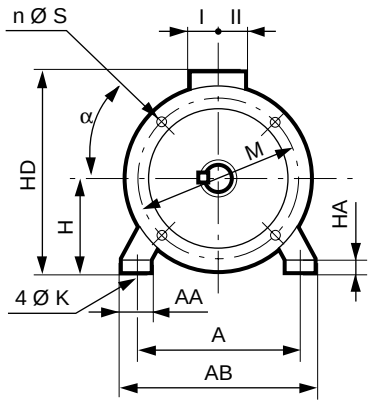

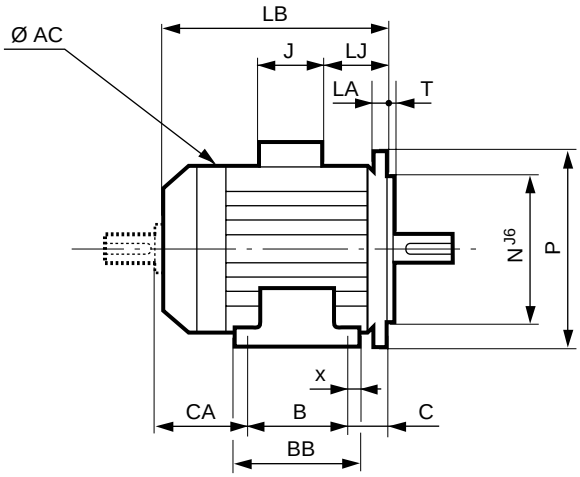

Type	Main dimensions																		
	A	AB	B	BB	C	X	AA	K	HA	H	AC	LB	HJ	HD	LJ	J	I	II	Sym.
FLSN 80 L	125	157	100	130	50	20	32	9	10	80	160	214	150	230	27	126	63	63	FF 165
FLSN 90 S	140	172	100	160	76	22	34	10	11	90	185	263	160	250	42	126	63	63	FF 165
FLSN 90 L	140	172	125	160	76	22	34	10	11	90	185	263	160	250	42	126	63	63	FF 165
FLSN 100 LK	160	200	140	174	63	22	42	12	12	100	226	323	193	293	37	150	75	75	FF 215
FLSN 112 M	190	230	140	174	70	22	45	12	12	112	226	323	193	305	37	150	75	75	FF 215
FLSN 112 MR	190	230	140	174	70	22	45	12	12	112	226	344	193	305	37	150	75	75	FF 215
FLSN 132 S	216	255	140	223	89	31	58	12	15	132	264	387	213	345	28	150	75	75	FF 265
FLSN 132 M	216	255	178	223	89	31	58	12	15	132	264	387	213	345	28	150	75	75	FF 265
FLSN 132 MR	216	255	178	223	89	31	58	12	15	132	264	410	213	345	28	150	75	75	FF 265
FLSN 160 M	254	294	210	294	108	20	65	14	24	160	310	495	280	440	50	220	128	128	FF 300
FLSN 160 L	254	294	254	294	108	20	65	14	24	160	310	495	280	440	50	220	128	128	FF 300
FLSN 180 MR	279	324	241	295	121	25	80	14	28	180	310	515	280	460	50	220	128	128	FF 300
FLSN 180 L	279	330	279	335	121	25	68	14	40	180	350	555	280	460	55	220	128	128	FF 300
FLSN 200 L	318	374	305	361	133	28	80	18	50	200	394	681	315	515	65	220	128	128	FF 350
FLSN 225 ST	356	420	286	367	149	28	100	18	35	225	394	681	315	540	65	220	128	128	FF 400
FLSN 225 MT	356	420	311	367	149	28	100	18	35	225	394	681	315	540	65	220	128	128	FF 400
FLSN 225 M	356	426	311	375	149	32	80	18	27	225	540	780	431	656	70	352	173	210	FF 400
FLSN 250 M	406	476	349	413	168	32	80	22	27	250	540	780	431	681	70	352	173	210	FF 500
FLSN 280 S	457	527	368	432	190	32	80	22	27	280	540	860	431	711	70	352	173	210	FF 500
FLSN 280 M	457	527	419	483	190	32	80	22	27	280	540	960	431	711	70	352	173	210	FF 500
FLSN 315 ST	508	598	406	547	216	45	90	27	45	315	556	1068	440	761	70	352	173	210	FF 600
FLSN 315 M	508	600	457	598	216	45	100	27	45	315	624	1203	507	835	70	452	219	269	FF 600
FLSN 315 L	508	600	508	598	216	45	100	27	45	315	624	1203	507	835	70	452	219	269	FF 600
FLSN 355 LA/LB	610	710	630	710	254	40	110	27	35	355	700	1305	545	910	62	452	219	269	FF 740
FLSN 355 LC/LD	610	710	630	710	254	40	110	27	35	355	700	1430	545	910	62	452	219	269	FF 740

E2 - Dimensions: FLSN cast iron motors

Dimensions in millimetres

– Flange mounting IM B5 (IM 3001)

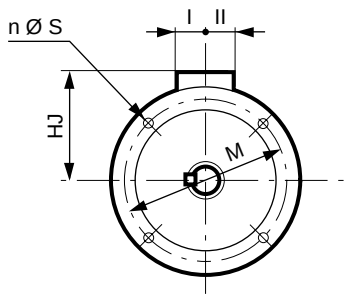

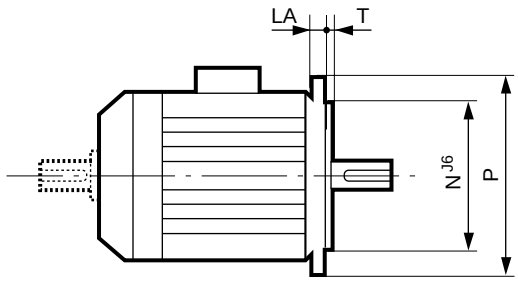

IEC symbol	Flange dimensions						
	M	N	P	T	n	S	LA
FF 165	165	130	200	3.5	4	12	10
FF 215	215	180	250	4	4	15	12
FF 265	265	230	300	4	4	15	14
FF 300	300	250	350	5	4	18	15
FF 350	350	300	400	5	4	18	15
FF 400	400	350	450	5	8	18	16
FF 500	500	450	550	5	8	18	18
FF 600	600	550	660	6	8	22	25
FF 740	740	680	800	6	8	22	25
FF 940	940	880	1000	6	8	28	28
FF 1080	1080	1000	1150	6	8	28	30

Flange mounted motors FF, in position IM 3001 (IM B5), are only available up to frame size 225.

FLSN non-sparking 3-phase TEFV induction motors Dimensions

E2 - Dimensions: FLSN cast iron motors

Dimensions in millimetres

Foot and face mounting IM B14 (IM 2101)

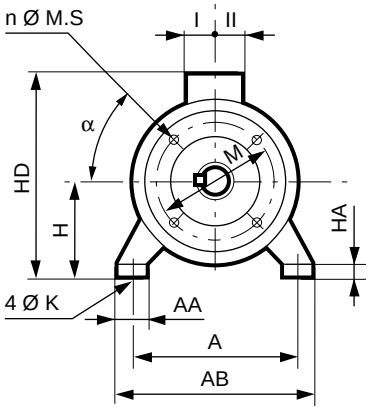

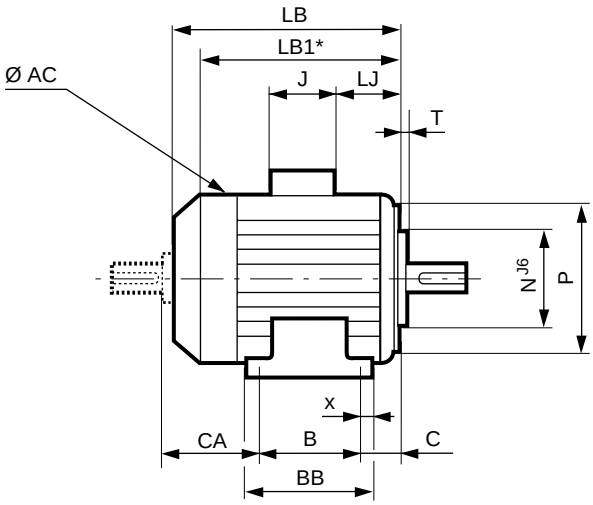

Type	Main dimensions																									
	A	AB	B	BB	C	X	AA	K	HA	H	AC	LB	LB1*	FLS						FLSC						Sym.
														HD	HJ	LJ	J	I	II	HD	HJ	LJ	J	I	II	
FLSN 80 L	125	157	100	130	50	20	32	9	10	80	160	214	178	222	142	33	114	57	57	230	150	27	126	63	63	FT 100
FLSN 90 S	140	172	100	160	56	22	34	9	11	90	185	243	204	247	153	28	114	57	57	250	162	22	126	63	63	FT 115
FLSN 90 L	140	172	125	160	56	22	34	9	11	90	185	243	204	247	153	28	114	57	57	250	162	22	126	63	63	FT 115
FLSN 100 LK	160	200	140	174	63	22	42	12	12	100	226	323	276	276	176	55	114	57	57	293	193	37	150	75	75	FT 130
FLSN 112 M	190	230	140	174	70	22	45	12	12	112	226	323	276	288	176	55	114	57	57	305	193	37	150	75	75	FT 130
FLSN 132 S	216	255	140	223	89	31	58	12	15	132	264	387	328	323	195	46	114	57	57	345	213	28	150	75	75	FT 215
FLSN 132 M	216	255	178	223	89	31	58	12	15	132	264	387	328	323	195	46	114	57	57	345	213	28	150	75	75	FT 215
FLSN 132 MU	216	255	178	223	89	31	58	12	15	132	264	410	352	323	195	46	114	57	57	345	213	28	150	75	75	FT 215

* LB1: non-ventilated motor

FLSN non-sparking 3-phase TEFV induction motors Dimensions

E2 - Dimensions: FLSN cast iron motors

Dimensions in millimetres

Face mounting IM B14 (IM 3601)

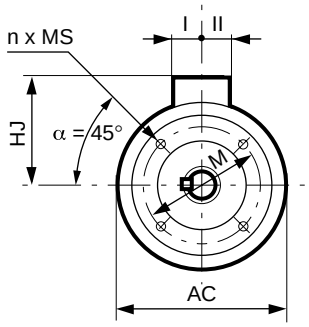

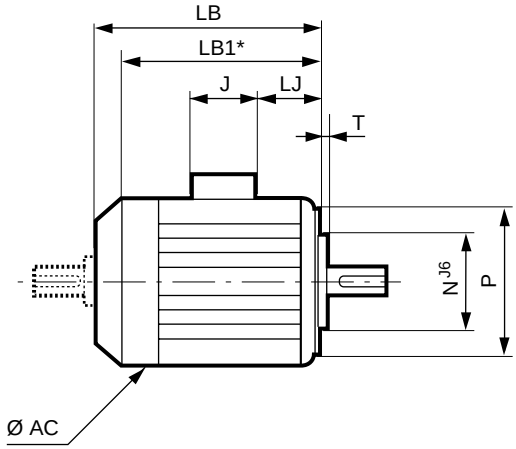

IEC symbol	Faceplate dimensions					
	M	N	P	T	n	MS
FT 100	100	80	120	3	4	M6
FT 115	115	95	140	3	4	M8
FT 115	115	95	140	3	4	M8
FT 130	130	110	160	3.5	4	M8
FT 130	130	110	160	3.5	4	M8
FT 215	215	180	250	4	4	M12
FT 215	215	180	250	4	4	M12
FT 215	215	180	250	4	4	M12

* LB1: non-ventilated motor

Type	Main dimensions														
	AC	LB	LB1*	FLS						FLSC					
				HD	HJ	LJ	J	I	II	HD	HJ	LJ	J	I	II
FLSN 80 L	160	214	178	222	142	33	114	57	57	230	150	27	126	63	63
FLSN 90 S	185	243	204	247	153	28	114	57	57	250	162	22	126	63	63
FLSN 90 L	185	243	204	247	153	28	114	57	57	250	162	22	126	63	63
FLSN 100 LK	226	323	276	276	176	55	114	57	57	293	193	37	150	75	75
FLSN 112 M	226	323	276	288	176	55	114	57	57	305	193	37	150	75	75
FLSN 132 S	264	387	328	323	195	46	114	57	57	345	213	28	150	75	75
FLSN 132 M	264	387	328	323	195	46	114	57	57	345	213	28	150	75	75
FLSN 132 MU	264	410	352	323	195	46	114	57	57	345	213	28	150	75	75

FLSN non-sparking 3-phase TEFV induction motors Dimensions

Optional features

Non-standard flanges

Motor type \ Flange type	(FF) Flange mounted													(FT) Face mounted						
	FF 115	FF 130	FF 165	FF 215	FF 265	FF 300	FF 350	FF 400	FF 500	FF 600	FF 740	FF 940	FF 1080	FT 85	FT 100	FT 115	FT 130	FT 165	FT 215	FT 265
FLSN 80 L	❍	❍	●	✶										✶	●	✶	✶	✶		
FLSN 90	✶	✶	●	✶											✶	●	✶	❍		
FLSN 90 (Foot)	❍	❍	❍	❍											✶	●	✶	❍		
FLSN 100 LK	❍	❍	❍	●												✶	●	❍	✶	
FLSN 112 M	❍	❍	❍	●												✶	●	❍	✶	
FLSN 112 MR		❍	❍	●	✶											✶	●	✶	✶	
FLSN 132 S/M/			❍	❍	●	❍												✶	●	✶
FLSN 160 M/L				✶	✶	●	✶													
FLSN 180 MR						●	✶													
FLSN 180 L						●	✶													
FLSN 200 L							●	✶												
FLSN 225 ST/MT							✶	●												
FLSN 225 S/M								●	✶											
FLSN 250 M								✶	●											
FLSN 280 S									●											
FLSN 280 M									●											
FLSN 315 S									✶	●										
FLSN 315 M/L										●										
FLSN 355 L											●									
FLSN 355 LK											●	✶								
FLSN 400											✶	●								
FLSN 400 LK												●	✶							
FLSN 450												✶	●							

● Standard ❍ Modified bearing location ✶ Adaptable without modification

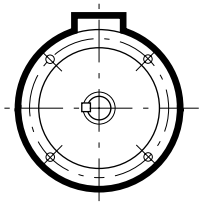

NOTE: For flanges up to FF 350, the flange is drilled with 4 holes oriented at 45° in relation to the axis of the terminal box.

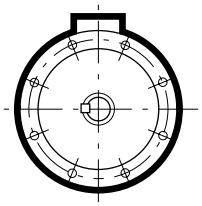

NOTE: From flange FF 400 upwards, the flange is drilled with 8 holes oriented at 22°30 in relation to the axes.

F1 - Identification

IDENTIFICATION PLATES AND LEGEND

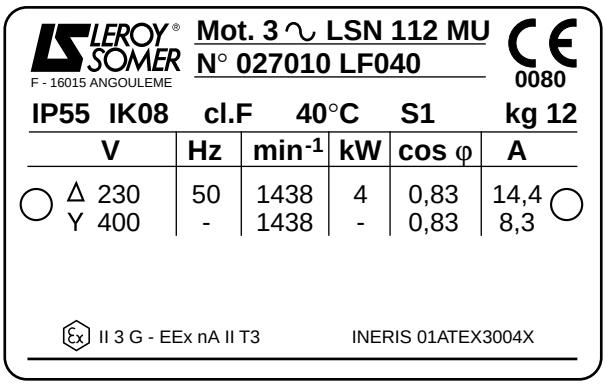

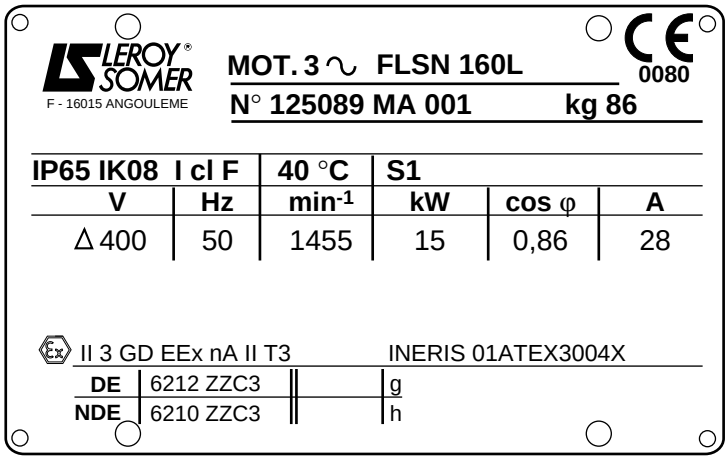

▼ ***Definition of symbols used on nameplates***

Legal mark of conformity of product to the requirements of European Directives.

MOT 3 ~ : Three-phase A.C. motor
LSN : LSN range
112 - 160: Frame size
MU - L : Frame size

Motor number

N° : Serial number
L - M * : Year of production
F - A ** : Month of production
040 - 001: Batch number

* L = 2001
M = 2002
.....

**A = January
B = February
.....

kg : Weight
IP55 : Index of protection
IK08 : Shock resistance index
I cl. F : Insulation class F
40°C : Maximum ambient operating temperature
S1 : Duty
V : Supply voltage
Hz : Supply frequency
min-1 : Revolutions per minute (rpm)
kW : Rated output power
cos φ: Power factor
A : Rated current
Δ : Connection symbol
ID/IN : Starting current
t_E : Locked rotor time

ATEX specific marking

0080 : Identification number from INERIS (Notified Body)
: Special mark denoting protection against risk of explosion
II 3 G or II 3 GD: group and category of equipment
EEx : Symbol denoting switchgear designed for potentially explosive atmospheres
nA : Protection type
II : Explosion group
T3 : Temperature class
INERIS : Notified Body
01ATEX3004X : EC type-examination certificate number type

Bearings

DE : Drive end
Drive end bearing
NDE : Non drive end
Non drive end bearing

F

LSN - FLSN non-sparking 3-phase TEFV induction motors Installation and Maintenance

F2 - Documentation - Manuals

LEROY-SOMER manufactures, in its ISO 9001 - Edition 2000, qualified production units, products certified by Bodies Notified: INERIS, LCIE, etc

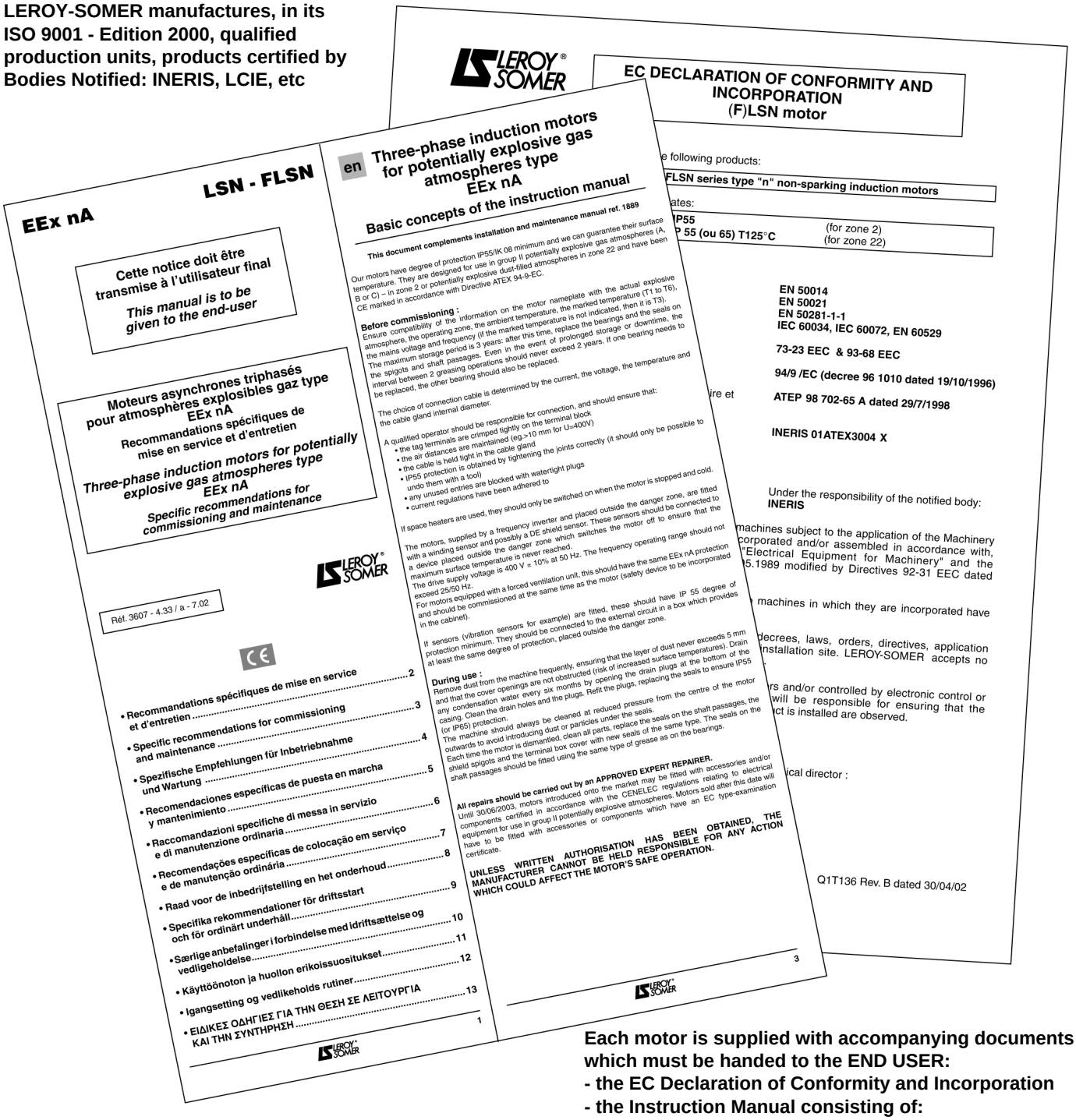

EEx nA

LSN - FLSN

Cette notice doit être transmise à l'utilisateur final

This manual is to be given to the end-user

Moteurs asynchrones triphasés pour atmosphères explosibles gaz type EEx nA

Recommandations spécifiques de mise en service et d'entretien

Three-phase induction motors for potentially explosive gas atmospheres type EEx nA

Specific recommendations for commissioning and maintenance

Réf. 3607 - 4.33 / a - 7.02

1

en **Three-phase induction motors for potentially explosive gas atmospheres type EEx nA**

Basic concepts of the instruction manual

This document complements installation and maintenance manual ref. 1889

Our motors have degree of protection IP55/IK 08 minimum and we can guarantee their surface temperature. They are designed for use in group II potentially explosive gas atmospheres (A, B or C) – in zone 2 or potentially explosive dust-filled atmospheres in zone 22 and have been CE marked in accordance with Directive ATEX 94-9-EC.

Before commissioning :
Ensure compatibility of the information on the motor nameplate with the actual explosive atmosphere, the operating zone, the ambient temperature, the marked temperature (T1 to T6), the mains voltage and frequency (if the marked temperature is not indicated, then it is T3). The maximum storage period is 3 years: after this time, replace the bearings and the seals on the spigots and shaft passages. Even in the event of prolonged storage or downtime, the interval between 2 greasing operations should never exceed 2 years. If one bearing needs to be replaced, the other bearing should also be replaced.

The choice of connection cable is determined by the current, the voltage, the temperature and the cable gland internal diameter.

A qualified operator should be responsible for connection, and should ensure that:
• the tag terminals are crimped tightly on the terminal block
• the air distances are maintained (eg.>10 mm for U>400V)
• the cable is held tight in the cable gland
• IP55 protection is obtained by tightening the joints correctly (it should only be possible to undo them with a tool)
• any unused entries are blocked with watertight plugs
• current regulations have been adhered to

If space heaters are used, they should only be switched on when the motor is stopped and cold.

The motors, supplied by a frequency inverter and placed outside the danger zone, are fitted with a winding sensor and possibly a DE shield sensor. These sensors should be connected to a device placed outside the danger zone which switches the motor off to ensure that the maximum surface temperature is never reached.
The drive supply voltage is 400 V ± 10% at 50 Hz. The frequency operating range should not exceed 25/50 Hz.
For motors equipped with a forced ventilation unit, this should have the same EEx nA protection and should be commissioned at the same time as the motor (safety device to be incorporated in the cabinet).

If sensors (vibration sensors for example) are fitted, these should have IP 55 degree of protection minimum. They should be connected to the external circuit in a box which provides at least the same degree of protection, placed outside the danger zone.

During use :
Remove dust from the machine frequently, ensuring that the layer of dust never exceeds 5 mm and that the cover openings are not obstructed (risk of increased surface temperatures). Drain any condensation water every six months by opening the drain plugs at the bottom of the casing. Clean the drain holes and the plugs. Refit the plugs, replacing the seals to ensure IP55 (or IP65) protection.
The machine should always be cleaned at reduced pressure from the centre of the motor outwards to avoid introducing dust or particles under the seals.
Each time the motor is dismantled, clean all parts, replace the seals on the shaft passages, the shield spigots and the terminal box cover with new seals of the same type. The seals on the shaft passages should be fitted using the same type of grease as on the bearings.

All repairs should be carried out by an APPROVED EXPERT REPAIRER.
Until 30/06/2003, motors introduced onto the market may be fitted with accessories and/or components certified in accordance with the CENELEC regulations relating to electrical equipment for use in group II potentially explosive atmospheres. Motors sold after this date will have to be fitted with accessories or components which have an EC type-examination certificate.

UNLESS WRITTEN AUTHORISATION HAS BEEN OBTAINED, THE MANUFACTURER CANNOT BE HELD RESPONSIBLE FOR ANY ACTION WHICH COULD AFFECT THE MOTOR'S SAFE OPERATION.

3

EC DECLARATION OF CONFORMITY AND INCORPORATION (F)LSN motor

e following products:

FLSN series type "n" non-sparking induction motors

ates:

IP55
P 55 (ou 65) T125°C (for zone 2) (for zone 22)

EN 50014
EN 50021
EN 50281-1-1
IEC 60034, IEC 60072, EN 60529

73-23 EEC & 93-68 EEC

94/9 /EC (decree 96 1010 dated 19/10/1996)

ATEP 98 702-65 A dated 29/7/1998

INERIS 01ATEX3004 X

ire et

Under the responsibility of the notified body: INERIS

machines subject to the application of the Machinery corporated and/or assembled in accordance with, "Electrical Equipment for Machinery" and the 5.1989 modified by Directives 92-31 EEC dated

machines in which they are incorporated have

decrees, laws, orders, directives, application nstallation site. LEROY-SOMER accepts no

rs and/or controlled by electronic control or will be responsible for ensuring that the ct is installed are observed.

ical director :

Q1T136 Rev. B dated 30/04/02

If lost, these documents will be supplied on request.

Each motor is supplied with accompanying documents which must be handed to the END USER:
- the EC Declaration of Conformity and Incorporation
- the Instruction Manual consisting of:
- **Recommendations for storing and installing induction motors.**
- **Specific instructions for 3-phase induction motors for use in explosive gas (3G) or gas and dust (3GD) atmospheres.**

***Warning :* Unless the manufacturer's agreement has been obtained in writing, any intervention which might affect the motor protection type is the responsibility of the person carrying out the work.**

Notes

Notes

Notes

I - APPLICATION AREA
Acceptance of our tenders or the placing of any order with us implies acceptance of the following conditions without exception or reservation. These conditions of sale shall prevail over all stipulations appearing on the customer's purchase order, his general conditions of purchase or any other document emanating from him and / or a third party.
A dispensation from these General Conditions of Sale applies to sales concerning foundry parts, which are subject to the European Foundries General Conditions of Sale, latest edition.

II - ORDERS
All orders, including those taken by our agents and representatives, by whatever mode of transmission, become valid only after we have accepted them in writing.
We reserve the right to modify the characteristics of our goods without prior warning. However, the customer reserves the possibility to specify technical specifications in the order. Unless such requirements have been notified in writing, the customer will not be able to refuse delivery of new modified goods.
Our company will not accept responsibility for an incorrect choice of goods if this incorrect choice results from incomplete and / or erroneous conditions of use, or conditions that have not been conveyed to the vendor by the customer.
Unless otherwise specified, our tenders and estimates are only valid for thirty days from the date of issue.
When the goods have to satisfy standards, particular regulations and / or be inspected by standards or control organisations, the price request must be accompanied by full specifications with which we must comply with. This is mentioned in the estimate. All test and inspection fees are the customer's responsibility.

III - PRICE
Our prices and price lists are shown exclusive of tax and may be revised without prior notice.
Our prices are either firm for the duration specified on the estimate, or subject to revision according to a formula accompanying the tender which, depending on the regulations, covers a change in the cost of raw materials, products, various services and salaries, an index of which is published in the B.O.C.C.R.F. ("Bulletin Officiel de la Concurrence, de la Consommation et de la Répression des Fraudes").
For any order of goods not found in our catalogue, requiring special manufacture, the invoice will include a minimum fixed sum of 600 FRF (six hundred French Francs) exclusive of tax, to cover start - up costs. Any tax due will be charged to the customer.
All related costs, such as customs clearance and special inspections, will be added on.
Customers should remember that the French Franc (or other currency) is being replaced by the Single European Currency (EURO) according to a European Community ruling. In accordance with the general principles of monetary law, references to the French Franc will then as of right be considered to refer to the Euro. This substitution will be enforced on the date and in accordance with the conditions defined by the European Community ruling.

IV - DELIVERY
Our export sales are governed by the INCOTERMS published by the International Chamber of Commerce ("I.C.C. INCOTERMS"), latest edition.
Goods are despatched in accordance with the conditions indicated on our order acknowledgement, sent out in response to any order for goods and / or services.
Unless otherwise specified, our prices refer to goods put at customer's disposal in our factories, and include standard packaging.
Unless otherwise specified, goods are always transported at the consignee's risk. Without exception, it is up to the purchaser to raise with the transporter, in the legal form and time limits, any claim concerning the condition or the number of packages received and also to send us at the same time a copy of this declaration. Failure to respect this procedure will relieve us of all responsibility.
In the case of CIF (Cost, Insurance & Freight) or CIP (Carriage & Insurance Paid to) sales, etc…, in the event of damage, our responsibility will only be engaged if any reservations and required declarations have been notified in the required time period, and will not in any case exceed the indemnity sum received from our insurers.
If the arrangements for despatch are modified, we reserve the right to invoice any additional costs arising from such changes. Packages cannot be returned.
Should the delivery of goods be delayed for a reason not attributable to the vendor, goods will be stored on the vendor's premises, at the own risk of the customer, at a charge for storage of 1% (one per cent) of the total order sum per week, beginning, without a grace period, on the day after the scheduled date of delivery indicated in the contract. After thirty days from this date, the vendor has the right to dispose of these goods as he wishes and arrange a new delivery date for the said goods with the customer. In all instances, all down payments received remain the property of the vendor as indemnity, without prejudice to other claims for damages that the vendor may wish to bring.

V - DELIVERY DATES
Delivery times are stated for information only, and do not include the month of August.
Delivery dates are counted from the issue date of the order acknowledgement from the vendor and are subject to compliance with the provisions indicated on the order acknowledgement, notably receipt of the down payment for the order, notification of the issuance of an irrevocable letter of credit conforming to all vendor requirements (especially as regards the amount, currency, validity, licence, etc.) and acceptance of the terms of payment with any guarantees which may be required, etc…
In no case does late delivery automatically entitle the customer to damages and / or penalties.
Unless otherwise specified, we reserve the right to make partial deliveries.
Delivery dates are automatically suspended without formal notice, and the vendor shall have no responsibility in cases of Force Majeure, or events beyond the control of the vendor or his suppliers such as delays, saturation, or unavailability of the planned transport methods, energy, raw materials etc., serious accidents such as fires, explosions, strikes, lock out, or emergency measures taken by the Authorities occurring after the conclusion of the order and preventing its normal execution. Similarly, delivery dates are automatically suspended without formal notice in all cases of failure to perform or late payment by the customer.

VI - TESTS
All goods manufactured by the vendor are tested before leaving the factory in accordance with vendor's ISO 9001 certifications. Customers may attend these tests : they simply have to convey the wish to do so in writing when the order is placed.
Specific tests and acceptance tests requested by the customer, whether conducted on the customer's premises, in our factories, on-site, or by inspection organisations, must be noted on the order and are to be paid for by the customer.
Goods specially developed for a customer will have to be approved by the latter before any delivery of mass - produced goods, notified by signing and returning to us the Product Approval Schedule reference Q1. T. 034.
In the event of the customer's insistence on delivery without having signed this form beforehand, the goods will then still be considered as prototypes and the customer will assume sole responsibility for using it or supplying it to his own customers.

VII -TERMS OF PAYMENT
All our sales are considered as carried out and payable at the registered office of the vendor, without exception, whatever the method of payment, the place of conclusion of the sale and delivery.
When the customer is based in France, our invoices are payable on receipt in cash, by banker's draft, or by L.C.R. ("Lettre de Change - Relevé"), within thirty days from the end of the month following the invoice date, net and without discount.
When the customer is based outside France, our invoices are payable in cash against delivery of the dispatching documents or by irrevocable documentary credit confirmed by a first class French bank with all bank charges payable by the customer.
Payments must be made in the currency of the invoice.
In accordance with French Law N° 92.1442 dated December 31,1992, non-payment of an invoice by its due date will give rise, after formal notice, to a penalty equal to one and a half times (1.5) the official rate of interest, and to late payment interest at the bank base rate plus five per cent. If the invoice carries V.A.T. (Value Added Tax), this is calculated on the amount, inclusive of tax, of the remaining sum due and comes into force from the due date.
Should steps have to be taken to recover the said amount, a surcharge of 15% (fifteen per cent) of the sum demanded will be payable.
Moreover, as a consequence of non - payment of an invoice or any term of payment, whatever the method of payment envisaged, the customer shall pay immediately for the whole of the outstanding amount owed to the vendor (including his subsidiaries, sister or parent companies, whether in France or overseas) for all deliveries or services, whatever their initial due date.
Notwithstanding any particular terms of payment arranged between the parties concerned, the vendor reserves the right to demand :

– payment in cash, before the goods leave the factory, for all orders in the process of manufacture, in the event of a problem with payment, or if the customer's financial situation justifies it,
– a down payment for the order.

Unless we are at fault, all down payments are non - returnable, without prejudice to our right to claim damages.
Any payment made in advance of the fixed payment date will lead to a discount of 0.2 % (zero point two per cent) per month of the amount concerned.

VIII - COMPENSATION CLAUSE
Unless prohibited by law, the vendor and the customer expressly agree between one another to compensate their respective debts arising from their commercial relationship, even if the conditions defined by law for legal compensation are not all satisfied.
In applying this clause, by vendor we mean any company in the LEROY SOMER group.

IX - TRANSFER OF RISKS - TRANSFERT OF TITLE
Transfer of risks occurs upon the handing over of the goods, according to the delivery conditions agreed at the time of ordering.
THE TRANSFER OF TITLE OF THE GOODS SOLD TO THE CUSTOMER OCCURS UPON PAYMENT OF THE WHOLE PRINCIPAL SUM AND INTEREST.
The provision of a document creating an obligation to pay (bank draft or similar) does not constitute payment.
So long as the price has not been paid in full, the customer is obliged to inform the vendor, within twenty - four hours, of the seizure, requisition or confiscation of goods to the benefit of a third party, and to take all safety measures to acquaint others with and respect our right of title in the event of intervention by creditors.
Failure to pay the amount due, whether total or partial, on the due date, for whatever reason and on whatever grounds, authorises the vendor to demand as of right and without formal notice, the return of the goods, wherever they may be, at the customer's expense and risk.
Return of the goods does not imply to cancellation of the sale .However, we reserve the option to apply the cancellation clause contained in these General Conditions of Sale.

X - CONFIDENTIALITY
The vendor and the customer undertake to maintain confidentiality of information of a technical, commercial or other nature, obtained during negotiations and / or the execution of any order.

XI - INDUSTRIAL AND INTELLECTUAL PROPERTY RIGHTS
The results, data, studies and information (whether patentable or not), or software developed by the vendor during execution of any order, and delivered to the customer, are the sole property of the vendor.
Apart from the instructions for use, servicing and maintenance, reports and documents of any type that we deliver to our customers remain our property and must be returned to us on request, even when design fees have been charged for them, and they shall not be communicated to third parties or used without the prior written agreement of the vendor.

XII - CANCELLATION CLAUSE
We reserve the right to cancel immediately, as of right and without formal notice, the sale of our goods in case of non-payment of any part of the price by the due date, or in case of any breach in the contractual obligations of the customer. In this case, the goods will have to be returned to us immediately, at the customer's own risk and expense, subject to a penalty of 10% (ten per cent) of its value per week of delay. All payments already received shall remain our property as indemnity, without prejudice to our rights to claim damages.

XIII -WARRANTY
The vendor warrants the goods against any defect, arising from a default in material or in workmanship, for twelve months starting from the date on which they are made available, according to the conditions defined below.

The warranty for goods with special applications, or goods used 24 hours a day, is automatically reduced by half.

On the other hand, parts or accessories of other origin, which bear their own brand name, are included in our warranty only to the extent of the warranty conditions granted by the suppliers of these parts.

The vendor's warranty will only apply insofar as the goods have been stored, used and maintained in accordance with the vendor's instructions and documentation. It cannot be invoked when the default results from :

– failure to monitor, maintain or store the goods correctly,

– normal wear and tear of goods,

– intervention on or modification to the goods without the vendor's prior authorisation in writing,

– abnormal use, or use not conforming to the intended purpose,

– defective installation at the customer's and / or the final user's premises,

– non-communication, by the customer, of the intended purpose or the conditions of use of the goods,

– failure to use original manufacturer's spare parts,

– Force Majeure or any event beyond the control of the vendor,

– etc …

In all cases, the warranty is limited to the replacement or the repair of parts or goods recognised as defective by our technical departments. If the repair is entrusted to a third party, it should only be carried out after acceptance by the vendor of the estimate for repair.

No goods should be returned without the vendor's prior authorisation in writing .

Goods to be repaired should be sent prepaid, to the address indicated by the vendor. If the goods have not been repaired under warranty, the cost of dispatching it back will be invoiced to the customer or to the end purchaser.

This warranty applies to our goods in accessible form and therefore does not cover the cost of dismantling and reinstallation of the said goods in the equipment in which they are integrated .

Repair, modification, or replacement of spare parts or goods during the warranty period will not extend the duration of the warranty.

The provisions of this article constitute the only obligation on the part of the vendor concerning the warranty for the goods supplied.

XIV -LIABILITY
The vendor will be liable for bodily injury caused by his goods or personnel.

The repair of property damages attributable to the vendor is expressly limited to a sum which may not exceed the amount of the goods found as defective.

It is expressly agreed that the vendor and the customer each waive any right to claim for indirect, consequential and / or punitive damages of any kind, such as loss of production, loss of profit, costs of withdrawal from the market or costs of recall, costs of dismantling and reinstallation of goods, loss of contracts, etc.

XV - SPARE PARTS AND ACCESSORIES
Spare parts and accessories are provided on request insofar as they are available. Related costs (carriage and any other costs) are always added to the invoice.

We reserve the right to demand a minimum quantity or invoice a minimum per order.

XVI - PARTIAL INVALIDITY
If any provision of these General Conditions of Sale is held to be unenforceable for any reason, it shall be adjusted rather than voided, if possible, in order to achieve the intent of the parties to the extent possible. In any event, all other provisions shall be deemed valid and enforceable to the full extent possible.

XVII -DISPUTES

THESE GENERAL CONDITIONS OF SALE ARE GOVERNED BY FRENCH LAW.

ANY DISPUTE RELATING TO OUR SALES, EVEN IN THE CASE OF MULTIPLE DEFENDANTS, SHALL BE, IN THE ABSENCE OF AMICABLE SETTLEMENT AND NOTWITHSTANDING ANY CLAUSE TO THE CONTRARY, SUBJECT TO THE JURISDICTION OF THE COURTS OF ANGOULEME (France).

LEROY-SOMER 16015 ANGOULÊME CEDEX - FRANCE

RCS ANGOULÊME N° B 671 820 223
S.A. au capital de 62 779 000 €

www.leroy-somer.com